SOUTH GIPPSLAND WATER
STANDARD SEWERAGE PUMP STATION
PUMP STATION TO 22kW (SOFT STARTER)
INSTRUMENTATION & CONTROL
DRAWING INDEX

ELECTRICAL DRAWINGS

DRAWING No.	DESCRIPTION
SASPG0001	PUMP STATION TO 22kW (SOFT STARTER) - DRAWING INDEX
SASPE0001	PUMP STATION TO 22kW (SOFT STARTER) - POWER & CONTROL SUPPLIES - SINGLE LINE DIAGRAM
SASPE0002	PUMP STATION TO 22kW (SOFT STARTER) - POWER & CONTROL SUPPLIES - ELECTRICAL SCHEMATIC DIAGRAM - SHEET 1 OF 2
SASPE0003	PUMP STATION TO 22kW (SOFT STARTER) - POWER & CONTROL SUPPLIES - ELECTRICAL SCHEMATIC DIAGRAM - SHEET 2 OF 2
SASPE0004	PUMP STATION TO 22kW (SOFT STARTER) - 12VDC POWER SUPPLIES - ELECTRICAL SCHEMATIC DIAGRAM
SASPI0008	PUMP STATION TO 22kW (SOFT STARTER) - COMMS - ELECTRICAL SCHEMATIC DIAGRAM
SASPE0005	PUMP STATION TO 22kW (SOFT STARTER) - 12VDC COMMON CONTROL - ELECTRICAL SCHEMATIC DIAGRAM
SASPE0006	PUMP STATION TO 22kW (SOFT STARTER) - PUMP No 1 (PPE201) - ELECTRICAL SCHEMATIC DIAGRAM
SASPE0007	PUMP STATION TO 22kW (SOFT STARTER) - PUMP No 2 (PPE202) - ELECTRICAL SCHEMATIC DIAGRAM
SASPE0008	PUMP STATION TO 22kW (SOFT STARTER) - DISCHARGE FLOW INSTRUMENT LOOP - ELECTRICAL SCHEMATIC DIAGRAM
SASPI0009	PUMP STATION TO 22kW (SOFT STARTER) - BRODERSEN RTU32E TELEMETRY UNIT - ELECTRICAL SCHEMATIC DIAGRAM
SASPI0010	PUMP STATION TO 22kW (SOFT STARTER) - BRODERSEN RTU32E TELEMETRY - DIGITAL INPUTS DI0 & DI1 - ELECTRICAL SCHEMATIC DIAGRAM
SASPI0011	PUMP STATION TO 22kW (SOFT STARTER) - BRODERSEN RTU32E TELEMETRY - DIGITAL INPUTS DI2 & DI3 - ELECTRICAL SCHEMATIC DIAGRAM
SASPI0012	PUMP STATION TO 22kW (SOFT STARTER) - BRODERSEN RTU32E TELEMETRY - DIGITAL OUTPUTS DO0 - ELECTRICAL SCHEMATIC DIAGRAM
SASPI0013	PUMP STATION TO 22kW (SOFT STARTER) - BRODERSEN RTU32E TELEMETRY - DIGITAL OUTPUTS DO1 - ELECTRICAL SCHEMATIC DIAGRAM
SASPI0014	PUMP STATION TO 22kW (SOFT STARTER) - BRODERSEN RTU32E TELEMETRY - ANALOGUE INPUTS AI0 - ELECTRICAL SCHEMATIC DIAGRAM
SASPI0015	PUMP STATION TO 22kW (SOFT STARTER) - BRODERSEN RTU32E TELEMETRY - ANALOGUE INPUTS AI1 - ELECTRICAL SCHEMATIC DIAGRAM
SASPI0016	PUMP STATION TO 22kW (SOFT STARTER) - BRODERSEN RTU32E TELEMETRY - ANALOGUE OUTPUTS AO0 & AO1 - ELECTRICAL SCHEMATIC DIAGRAM
SASPI0017	PUMP STATION TO 22kW (SOFT STARTER) - PROCESS & INSTRUMENTATION DIAGRAM
SASPG0002	PUMP STATION TO 22kW (SOFT STARTER) - STANDARD WIRING COLOUR CODING - mA LOOP TERMINAL WIRING
SASPG0003	PUMP STATION TO 22kW (SOFT STARTER) - CABLE LISTING - CABLE BLOCK DIAGRAM

CUBICLE DRAWINGS

DRAWING No.	DESCRIPTION
SASPG0004	PUMP STATION TO 22kW (SOFT STARTER) - PARTS LIST
SASPM0001	PUMP STATION TO 22kW (SOFT STARTER) - BACK TO BACK CUBICLE - GENERAL ARRANGEMENT
SASPM0002	PUMP STATION TO 22kW (SOFT STARTER) - BACK TO BACK CUBICLE - SECTIONAL ARRANGEMENT - SHEET 1 OF 2
SASPM0003	PUMP STATION TO 22kW (SOFT STARTER) - BACK TO BACK CUBICLE - SECTIONAL ARRANGEMENT - SHEET 2 OF 2
SASPM0004	PUMP STATION TO 22kW (SOFT STARTER) - BACK TO BACK CUBICLE - METERING COMPARTMENT DETAILS
SASPM0005	PUMP STATION TO 22kW (SOFT STARTER) - SIDE BY SIDE CUBICLE - J/B RHS - GENERAL ARRANGEMENT
SASPM0006	PUMP STATION TO 22kW (SOFT STARTER) - SIDE BY SIDE CUBICLE - J/B RHS - SECTIONAL ARRANGEMENT - SHEET 1 OF 2
SASPM0007	PUMP STATION TO 22kW (SOFT STARTER) - SIDE BY SIDE CUBICLE - J/B RHS - SECTIONAL ARRANGEMENT - SHEET 2 OF 2
SASPM0008	PUMP STATION TO 22kW (SOFT STARTER) - SIDE BY SIDE CUBICLE - J/B RHS - METERING COMPARTMENT DETAILS
SASPM0016	PUMP STATION TO 22kW (SOFT STARTER) - SIDE BY SIDE CUBICLE - J/B LHS - GENERAL ARRANGEMENT
SASPM0017	PUMP STATION TO 22kW (SOFT STARTER) - SIDE BY SIDE CUBICLE - J/B LHS - SECTIONAL ARRANGEMENT - SHEET 1 OF 2
SASPM0018	PUMP STATION TO 22kW (SOFT STARTER) - SIDE BY SIDE CUBICLE - J/B LHS - SECTIONAL ARRANGEMENT - SHEET 2 OF 2
SASPM0019	PUMP STATION TO 22kW (SOFT STARTER) - SIDE BY SIDE CUBICLE - J/B LHS - METERING COMPARTMENT DETAILS
SASPM0009	PUMP STATION TO 22kW (SOFT STARTER) - CONTROL & DISTRIBUTION COMPARTMENT (EC004) - DOOR LAYOUT
SASPM0010	PUMP STATION TO 22kW (SOFT STARTER) - CONTROL & DISTRIBUTION COMPARTMENT (EC004) - GEAR TRAY LAYOUT
SASPM0011	PUMP STATION TO 22kW (SOFT STARTER) - TELEMETRY COMPARTMENT (EC003) - GEAR TRAY LAYOUT
SASPM0012	PUMP STATION TO 22kW (SOFT STARTER) - METERING COMPARTMENT (EC001) - GEAR TRAY LAYOUT
SASPM0013	PUMP STATION TO 22kW (SOFT STARTER) - IT COMPARTMENT (EC002) - GEAR TRAY LAYOUT
SASPM0014	PUMP STATION TO 22kW (SOFT STARTER) - JUNCTION BOX COMPARTMENT (EC005) - GEAR TRAY LAYOUT
SASPM0015	PUMP STATION TO 22kW (SOFT STARTER) - PUMP STATION CUBICLE - GEAR TRAY DRILLING DETAILS
SASPG0005	PUMP STATION TO 22kW (SOFT STARTER) - PUMP STATION CUBICLE - DOOR LABEL DETAILS

REV NO	DATE	DESIGN REVIEW	REV'D P.MGR	APP'D P.DIR	AMENDMENT
2	24/04/17	SGW/TB	SGW/GB		INITIAL ISSUE TO SGW.
1	09/03/17	SGW/JF	SGW/GB		REVISED TITLE SASPI0008.
0	29/09/15	SGW/TB	SGW/GB		ISSUED FOR REVIEW

DESIGN CONSULTANT

CLIENT LOGO

South GippslandWater

PROJECT: STANDARD DRAWINGS

LOCATION: SOUTH GIPPSLAND WATER

DRAWN	DRAFTING CHECK	REVIEWED PROJECT MANAGER	APPROVED PROJECT DIRECTOR
OPT/CT	OPT/RJ		
DESIGNED	DESIGN REVIEW		
SGW/TB	SGW/GB		

TITLE: STANDARD SEWERAGE PUMP STATION
PUMP STATION TO 22kW (SOFT STARTER)
INSTRUMENTATION & CONTROL
DRAWING INDEX

SCALE	DRAWING No.	REVISION
NTS	SASPG0001	2

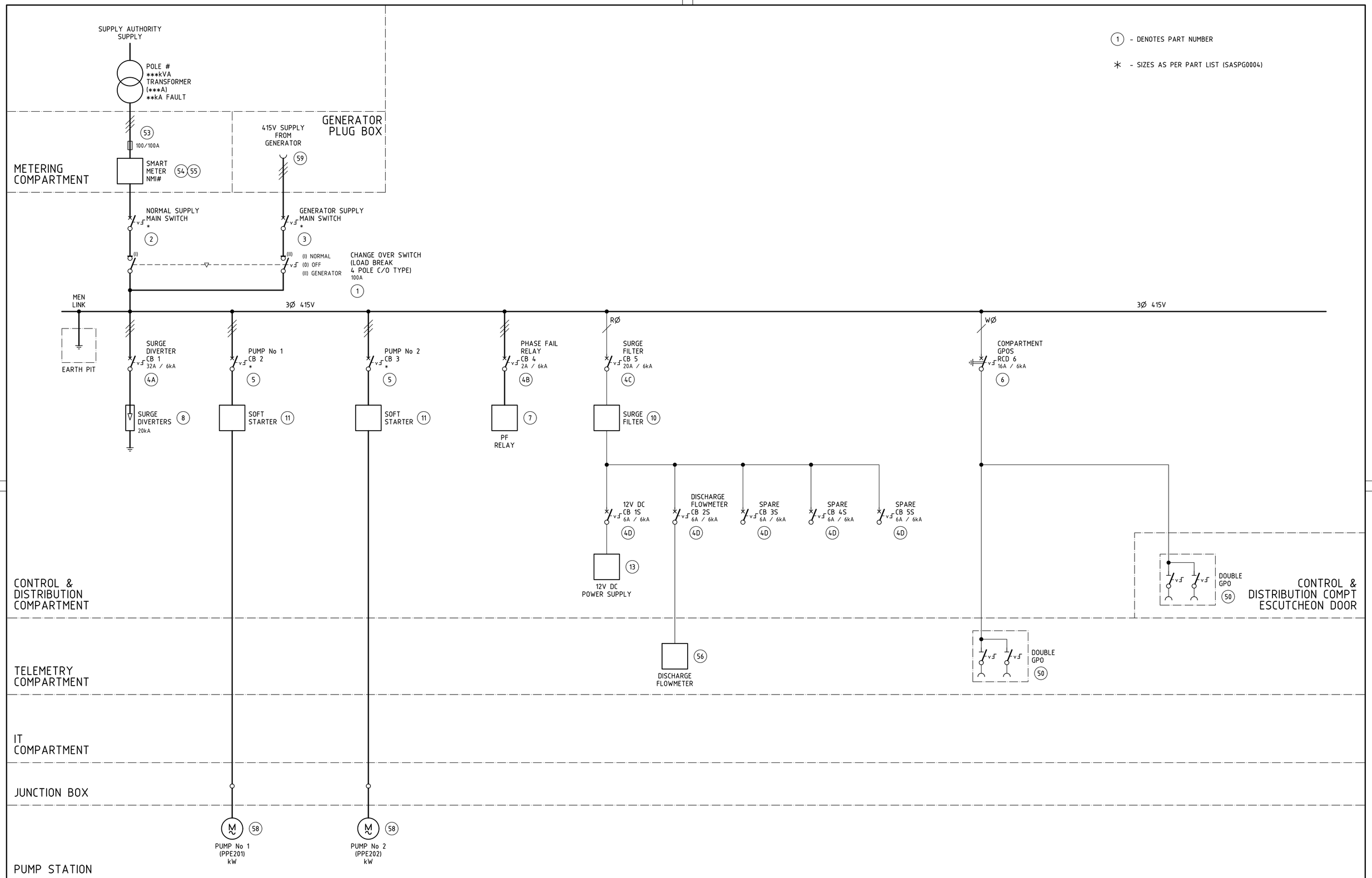

REV NO	DATE	DESIGN REVIEW	REV'D P.MGR	APP'D P.DIR	AMENDMENT
1	24/04/17	SGW/TB	SGW/GB		INITIAL ISSUE TO SGW.
0	29/09/15	SGW/TB	SGW/GB		ISSUED FOR REVIEW

DESIGN CONSULTANT

CLIENT LOGO

South GippslandWater

PROJECT: STANDARD DRAWINGS

LOCATION: SOUTH GIPPSLAND WATER

DRAWN	DRAFTING CHECK	REVIEWED PROJECT MANAGER	APPROVED PROJECT DIRECTOR
OPT/CT	OPT/RJ		
DESIGNED	DESIGN REVIEW		
SGW/TB	SGW/GB		

TITLE

STANDARD SEWERAGE PUMP STATION

PUMP STATION TO 22kW (SOFT STARTER)
POWER & CONTROL SUPPLIES
SINGLE LINE DIAGRAM

SCALE	DRAWING No.	REVISION
NTS	SASPE0001	1

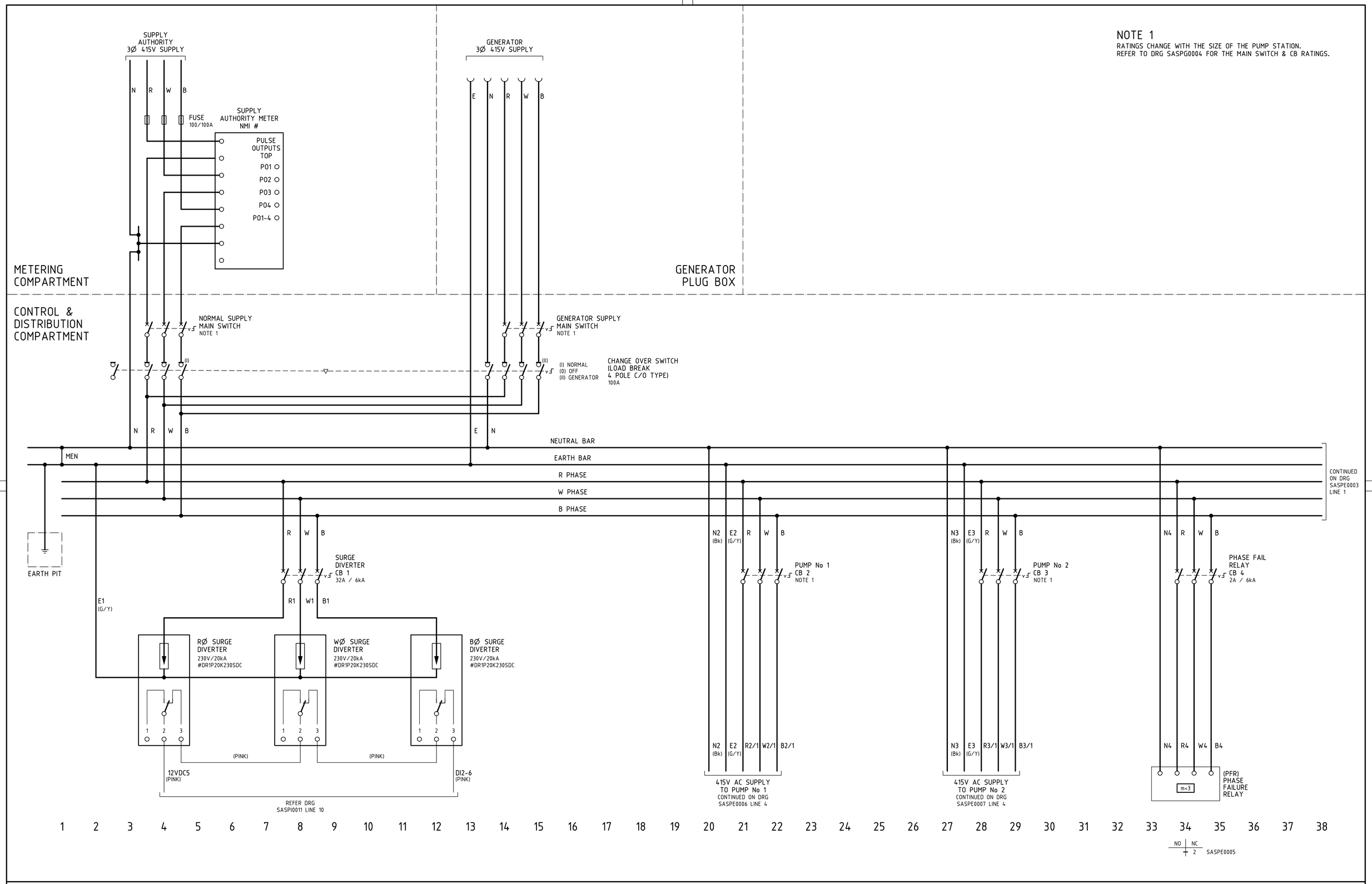

REV NO	DATE	DESIGN REVIEW	REV'D P.MGR	APP'D P.DIR	AMENDMENT
2	24/04/17	SGW/TB	SGW/GB		INITIAL ISSUE TO SGW.
1	14/06/16	SGW/TB	SGW/GB		REVISED CROSS REFERENCES DUE TO DI REALLOCATION.
0	29/09/15	SGW/TB	SGW/GB		ISSUED FOR REVIEW

DESIGN CONSULTANT

CLIENT LOGO

South GippslandWater

PROJECT: STANDARD DRAWINGS

LOCATION: SOUTH GIPPSLAND WATER

DRAWN	DRAFTING CHECK	REVIEWED PROJECT MANAGER	APPROVED PROJECT DIRECTOR
OPT/CT	OPT/RJ		
DESIGNED	DESIGN REVIEW		
SGW/TB	SGW/GB		

TITLE

STANDARD SEWERAGE PUMP STATION

PUMP STATION TO 22kW (SOFT STARTER)
POWER & CONTROL SUPPLIES
ELECTRICAL SCHEMATIC DIAGRAM SHEET 1 OF 2

SCALE	DRAWING No.	REVISION
NTS	SASPE0002	2

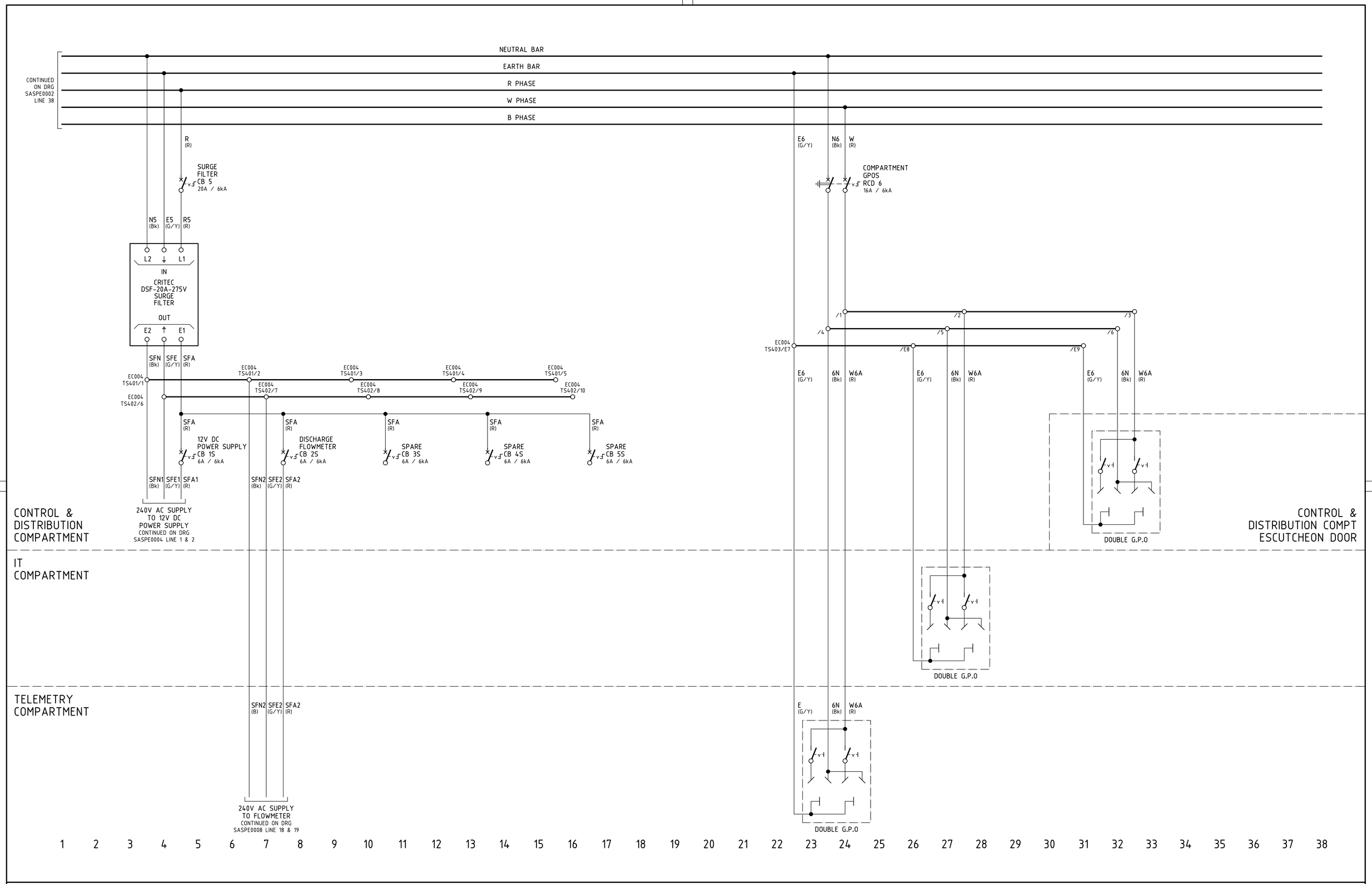

REV NO	DATE	DESIGN REVIEW	REV'D P.MGR	APP'D P.DIR	AMENDMENT
1	24/04/17	SGW/TB	SGW/GB		INITIAL ISSUE TO SGW.
0	29/09/15	SGW/TB	SGW/GB		ISSUED FOR REVIEW

DESIGN CONSULTANT

CLIENT LOGO

South GippslandWater

PROJECT: STANDARD DRAWINGS

LOCATION: SOUTH GIPPSLAND WATER

DRAWN	DRAFTING CHECK	REVIEWED PROJECT MANAGER	APPROVED PROJECT DIRECTOR
OPT/CT	OPT/RJ		
DESIGNED	DESIGN REVIEW		
SGW/TB	SGW/GB		

TITLE

STANDARD SEWERAGE PUMP STATION

PUMP STATION TO 22kW (SOFT STARTER)
POWER & CONTROL SUPPLIES
ELECTRICAL SCHEMATIC DIAGRAM SHEET 2 OF 2

SCALE	DRAWING No.	REVISION
NTS	SASPE0003	1

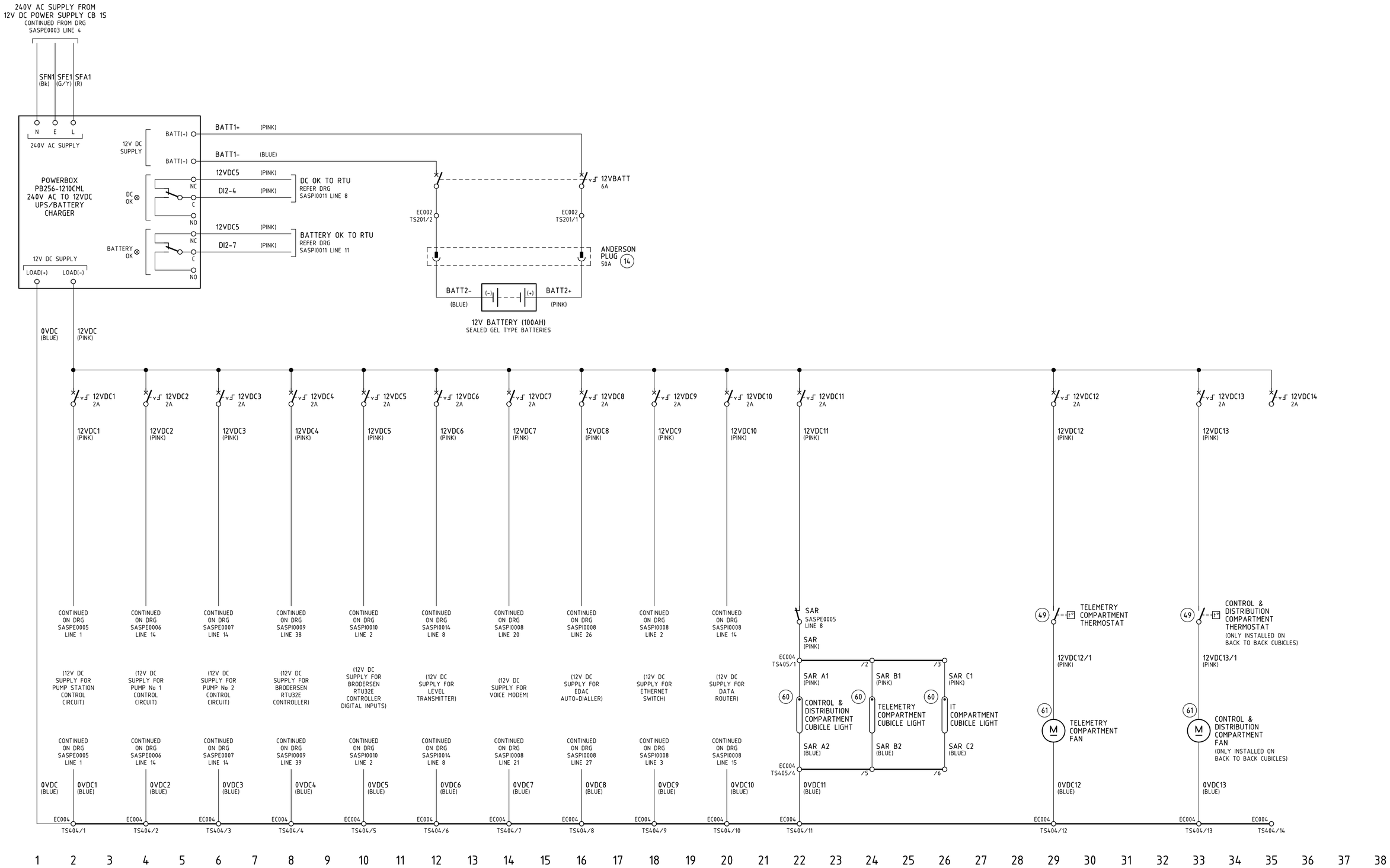

REV NO	DATE	DESIGN REVIEW	REV'D P.MGR	APP'D P.DIR	AMENDMENT
5	24/04/17	SGW/TB	SGW/GB		INITIAL ISSUE TO SGW.
4	09/03/17	SGW/JF	SGW/GB		ADDED CB FOR DATA ROUTER.
3	01/03/17	SGW/TB	SGW/GB		REVISED SAR CONTACT AND DC OK & BATTERY OK SIGNALS TO RTU NO TO NC
2	16/08/16	SGW/TB	SGW/GB		ADDED DC OK & BATTERY OK TO RTU ON UPS REVISED LINE NUMBER REFERENCE TO SAR RELAY IN LINE 20.
1	18/07/16	SGW/TB	SGW/GB		RELOCATED BATTERY CB & TERMINAL STRIP FROM IT COMPARTMENT TO CONTROL COMPARTMENT.
0	29/09/15	SGW/TB	SGW/GB		ISSUED FOR REVIEW

DESIGN CONSULTANT

CLIENT LOGO

South GippslandWater

PROJECT: STANDARD DRAWINGS

LOCATION: SOUTH GIPPSLAND WATER

DRAWN	DRAFTING CHECK	REVIEWED PROJECT MANAGER	APPROVED PROJECT DIRECTOR
OPT/CT	OPT/RJ		
DESIGNED	DESIGN REVIEW		
SGW/TB	SGW/GB		

TITLE

STANDARD SEWERAGE PUMP STATION

PUMP STATION TO 22kW (SOFT STARTER)
12VDC POWER SUPPLIES
ELECTRICAL SCHEMATIC DIAGRAM

SCALE	DRAWING No.	REVISION
NTS	SASPE0004	5

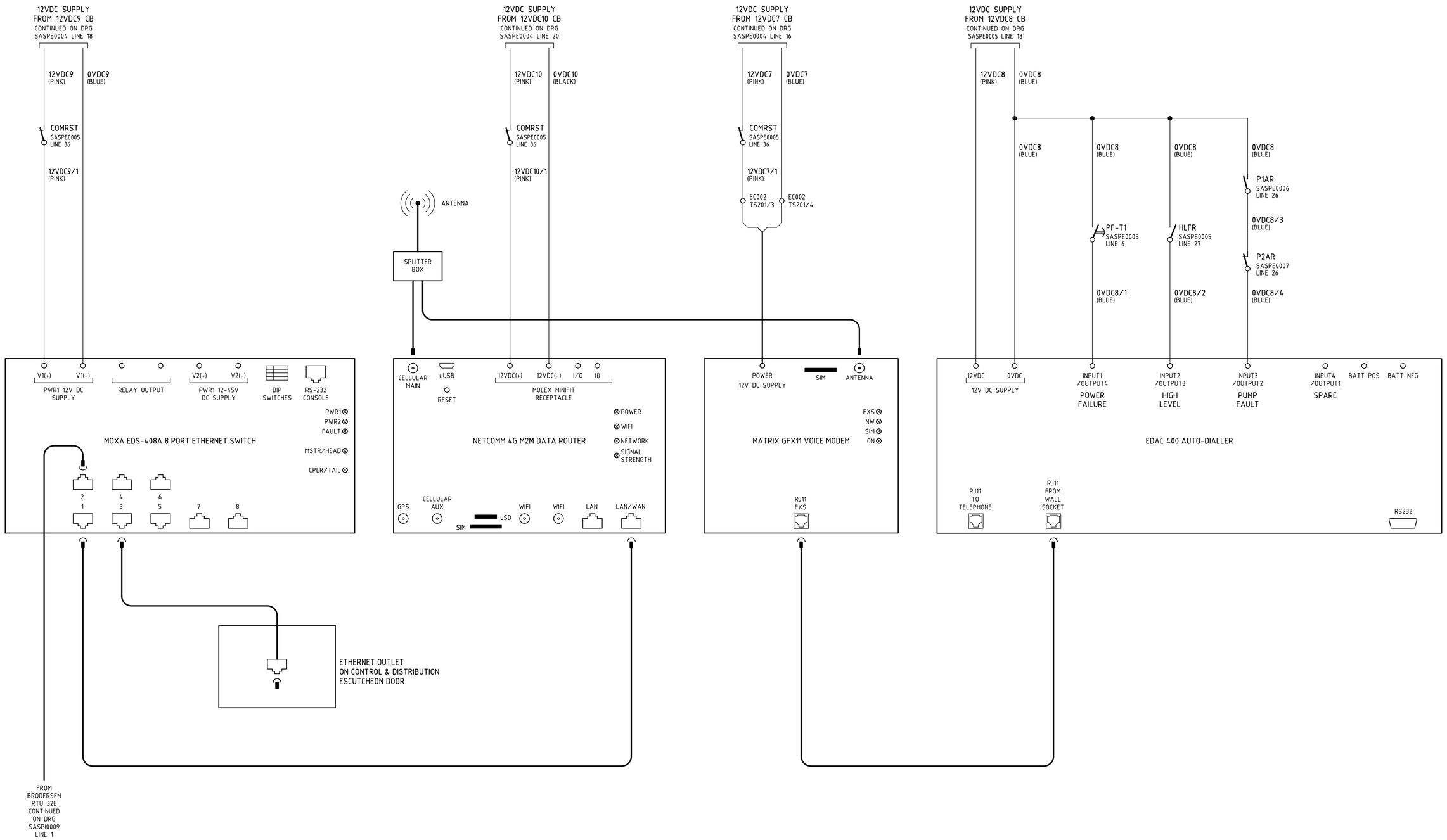

REV NO	DATE	DESIGN REVIEW	REV'D P.MGR	APP'D P.DIR	AMENDMENT
5	24/04/17	SGW/TB	SGW/GB		INITIAL ISSUE TO SGW.
4	09/03/17	SGW/JF	SGW/GB		REVISED FOR NEW ETHERNET/MODEM DETAILS.
3	01/03/17	SGW/TB	SGW/GB		REVISED PUMP FAULT CONTACTS TOL1 & TOL2 NO TO P1AR & P2AR NC.
2	03/08/16	SGW/TB	SGW/GB		ADDED 3G MODEM RESET CONTACT LINE 4.
1	18/07/16	SGW/TB	SGW/GB		REVISED TS201 DETAILS DUE TO RELOCATION FROM IT COMPARTMENT TO CONTROL COMPARTMENT.
0	29/09/15	SGW/TB	SGW/GB		ISSUED FOR REVIEW

DESIGN CONSULTANT

CLIENT LOGO

South GippslandWater

PROJECT: STANDARD DRAWINGS

LOCATION: SOUTH GIPPSLAND WATER

DRAWN	DRAFTING CHECK	REVIEWED PROJECT MANAGER	APPROVED PROJECT DIRECTOR
OPT/CT	OPT/RJ		
DESIGNED	DESIGN REVIEW		
SGW/TB	SGW/GB		

TITLE

STANDARD SEWERAGE PUMP STATION

PUMP STATION TO 22kW (SOFT STARTER)
COMMS
ELECTRICAL SCHEMATIC DIAGRAM

SCALE	DRAWING No	REVISION
NTS	SASPI0008	5

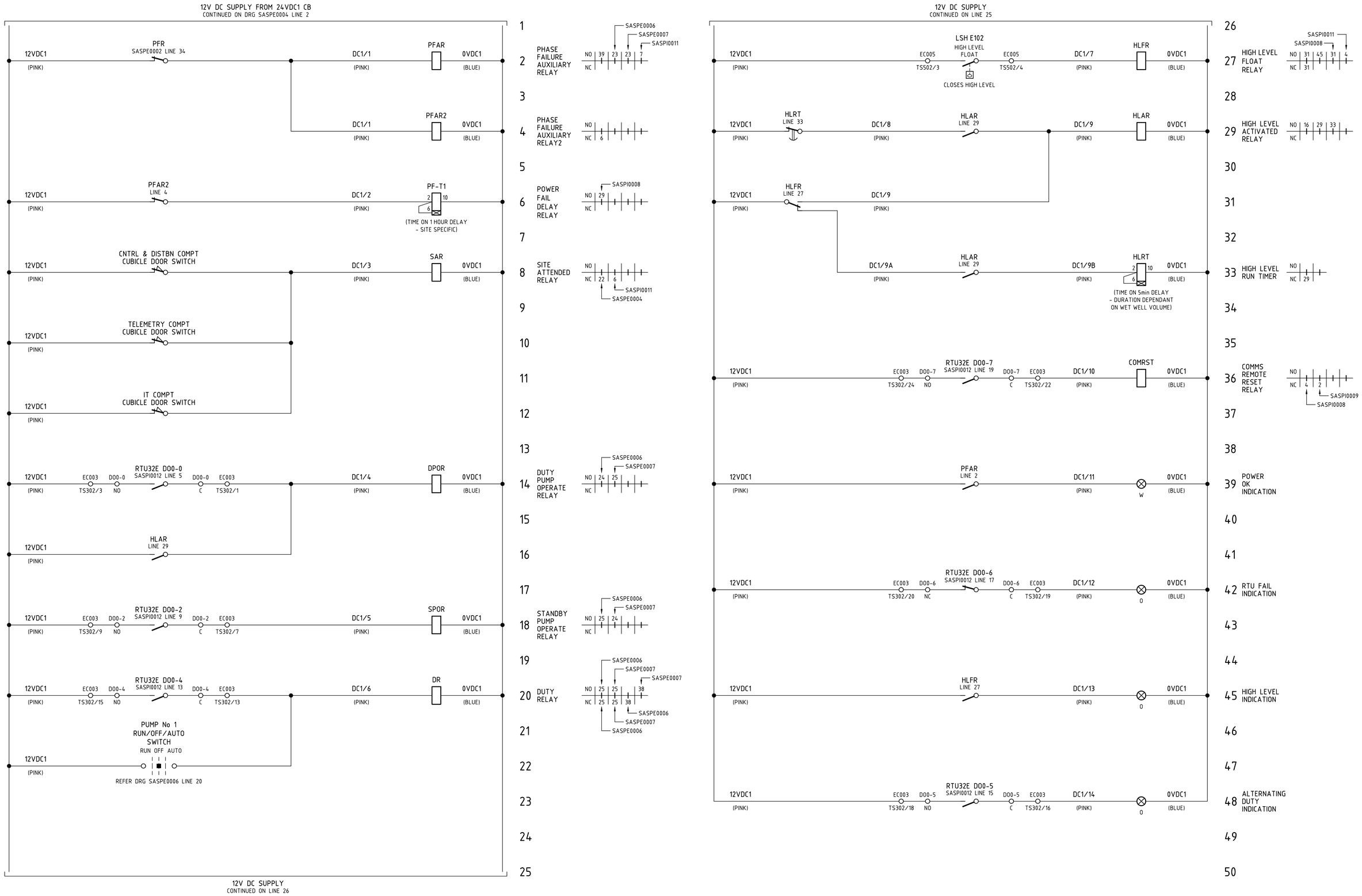

REV NO	DATE	DESIGN REVIEW	REV'D P.MGR	APP'D P.DIR	AMENDMENT
5	01/03/17	SGW/TB	SGW/GB		REVISED CUB DOOR SWs & SAR CONTACTS TO NC ADDED RESET FOR FIREWALL SWITCH LINE 36.
4	16/08/16	SGW/TB	SGW/GB		REMOVED DCFR RELAY REPLACED WITH UPS RELAY OUTPUT.
3	10/08/16	SGW/TB	SGW/GB		REVISED WIRING DETAILS TO TIMERS.
2	03/08/16	SGW/TB	SGW/GB		ADDED 3G MODEM REMOTE RESET RELAY LINE 36.
7	24/04/17	SGW/TB	SGW/GB		INITIAL ISSUE TO SGW.
6	09/03/16	SGW/JF	SGW/GB		REVISED REF TO SAR & PF-T1 CONTACTS.

DESIGN CONSULTANT

CLIENT LOGO

South GippslandWater

PROJECT: STANDARD DRAWINGS

LOCATION: SOUTH GIPPSLAND WATER

DRAWN	DRAFTING CHECK	REVIEWED PROJECT MANAGER	APPROVED PROJECT DIRECTOR
OPT/CT	OPT/RJ		
DESIGNED	DESIGN REVIEW		
SGW/TB	SGW/GB		

TITLE

STANDARD SEWERAGE PUMP STATION

PUMP STATION TO 22kW (SOFT STARTER)
12VDC COMMON CONTROL
ELECTRICAL SCHEMATIC DIAGRAM

SCALE	DRAWING No	REVISION
NTS	SASPE0005	7

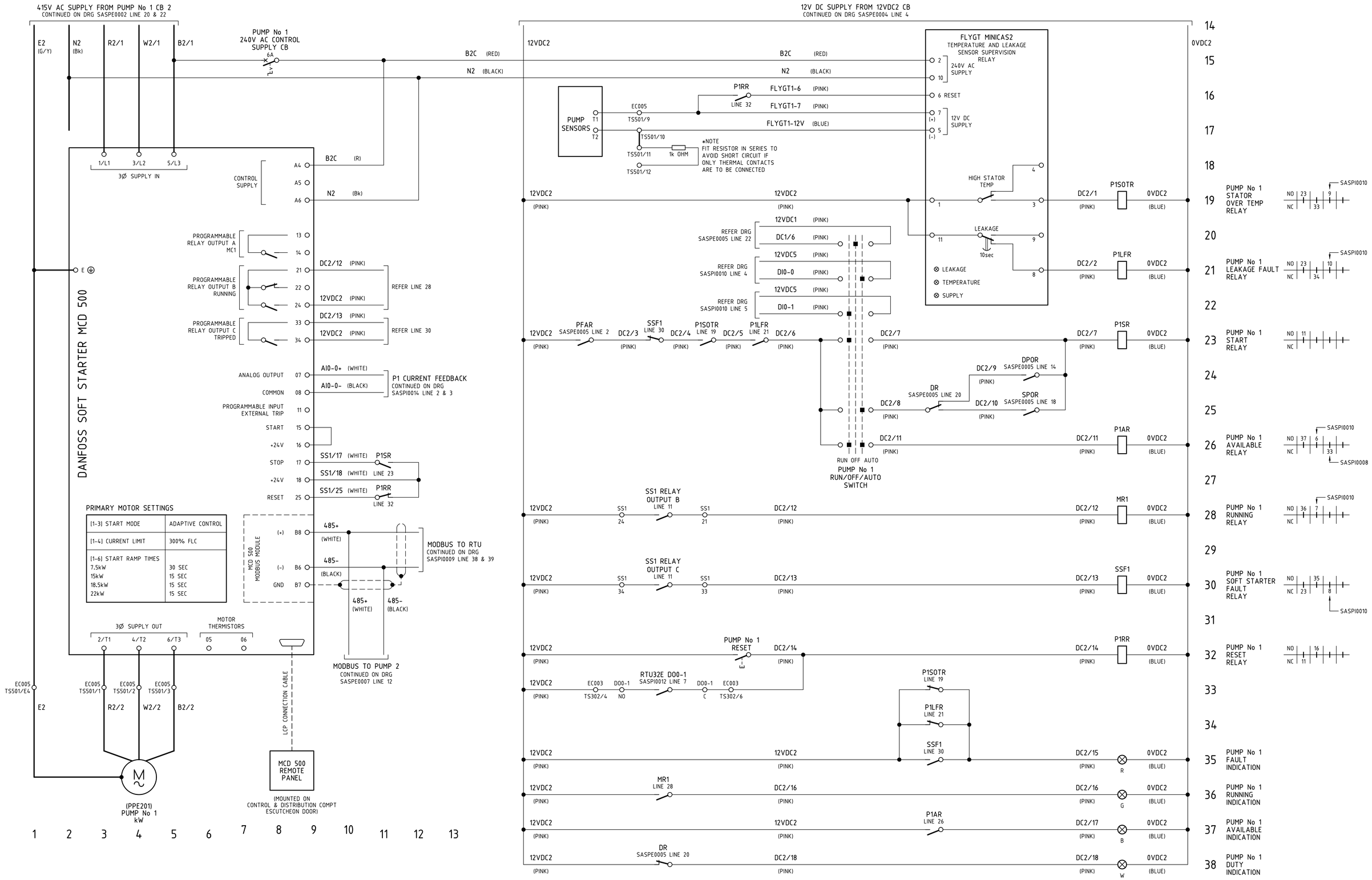

REV NO	DATE	DESIGN REVIEW	REV'D P.MGR	APP'D P.DIR	AMENDMENT
5	24/04/17	SGW/TB	SGW/GB		INITIAL ISSUE TO SGW.
4	09/03/17	SGW/JF	SGW/GB		REVISED PUMP AVAILABLE CONTACT REF.
3	01/03/17	SGW/TB	SGW/GB		P1SOTR & P1LFR FAULT CONTACTS NO TO NC - PUMP FAULT CONTACTS TO MODEM SSF1 NO TO P1AR NC.
2	10/08/16	SGW/TB	SGW/GB		REVISED RELAY CONTACT SETUP IN LINE 25 REVISED FERRULE NUMBERS ON SS RELAY CONTACTS.
1	14/06/16	SGW/TB	SGW/GB		ADDED RUN SIGNAL TO RTU ON RUN/OFF/AUTO SWITCH REVISED CROSS REFS DUE TO DI REALLOCATION.
0	29/09/15	SGW/TB	SGW/GB		ISSUED FOR REVIEW

DESIGN CONSULTANT

CLIENT LOGO

South GippslandWater

PROJECT: STANDARD DRAWINGS

LOCATION: SOUTH GIPPSLAND WATER

DRAWN	DRAFTING CHECK	REVIEWED PROJECT MANAGER	APPROVED PROJECT DIRECTOR
OPT/CT	OPT/RJ		
DESIGNED SGW/TB	DESIGN REVIEW SGW/GB		

TITLE

STANDARD SEWERAGE PUMP STATION

PUMP STATION TO 22kW (SOFT STARTER)

PUMP No 1 (PPE201)

ELECTRICAL SCHEMATIC DIAGRAM

SCALE: NTS

DRAWING No: SASPE0006

REVISION: 5

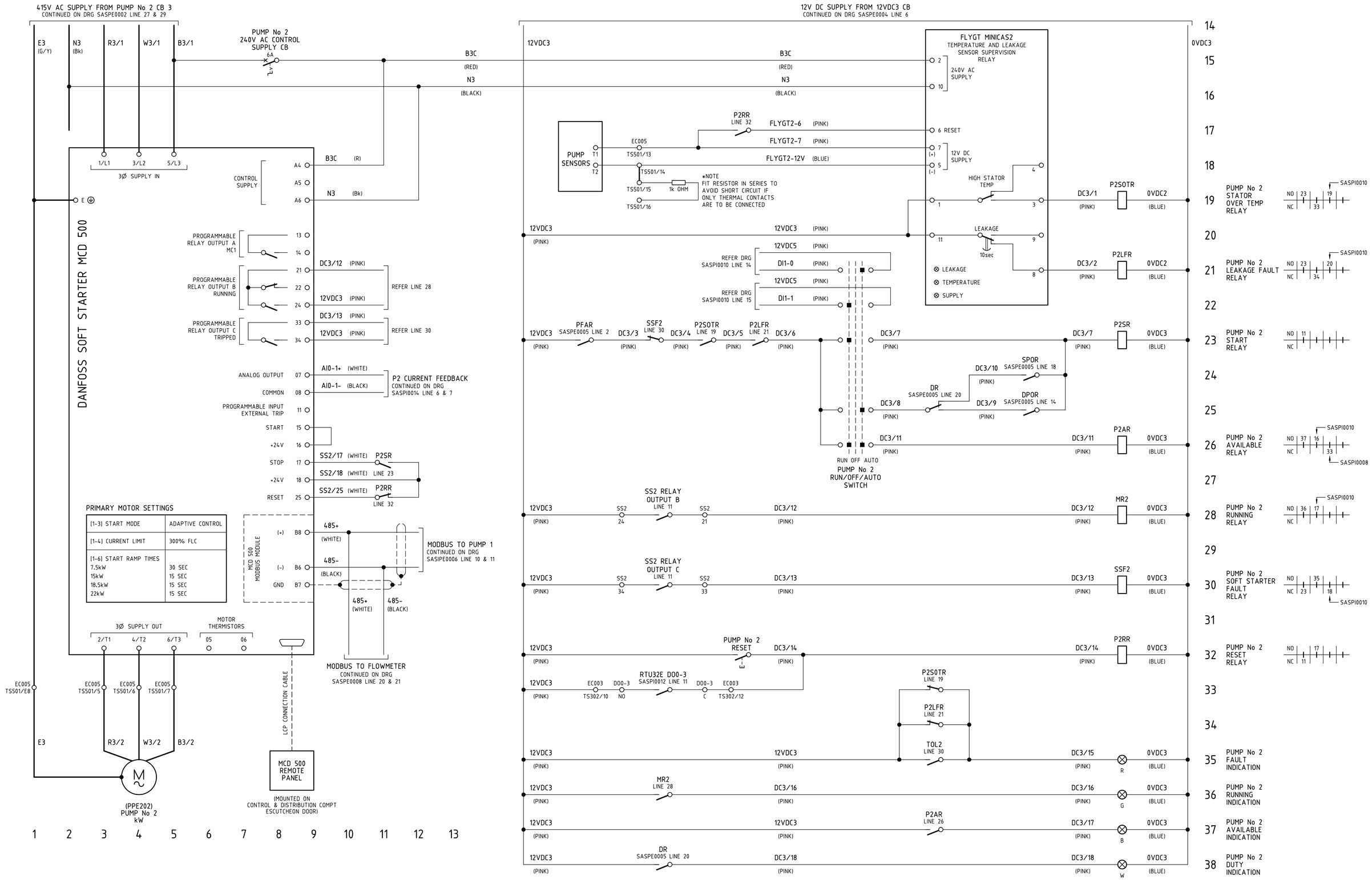

REV NO	DATE	DESIGN REVIEW	REV'D P.MGR	APP'D P.DIR	AMENDMENT
4	24/04/17	SGW/TB	SGW/GB		INITIAL ISSUE TO SGW.
3	09/03/17	SGW/JF	SGW/GB		REVISED PUMP AVAILABLE CONTACT REF.
2	10/08/16	SGW/TB	SGW/GB		REVISED DR RELAY CONTACT SET UP IN LINE 25 REVISED FERRULE NUMBERS ON SS RELAY CONTACTS.
1	14/06/16	SGW/TB	SGW/GB		ADDED RUN SIGNAL TO RTU ON RUN/OFF/AUTO SWITCH REVISED CROSS REFS DUE TO DI REALLOCATION.
0	29/09/15	SGW/TB	SGW/GB		ISSUED FOR REVIEW

DESIGN CONSULTANT

CLIENT LOGO

South GippslandWater

PROJECT: STANDARD DRAWINGS

LOCATION: SOUTH GIPPSLAND WATER

DRAWN	DRAFTING CHECK	REVIEWED PROJECT MANAGER	APPROVED PROJECT DIRECTOR
OPT/CT	OPT/RJ		
DESIGNED	DESIGN REVIEW		
SGW/TB	SGW/GB		

TITLE

STANDARD SEWERAGE PUMP STATION

PUMP STATION TO 22kW (SOFT STARTER)

PUMP No 2 (PPE202)

ELECTRICAL SCHEMATIC DIAGRAM

SCALE	DRAWING No.	REVISION
NTS	SASPE0007	4

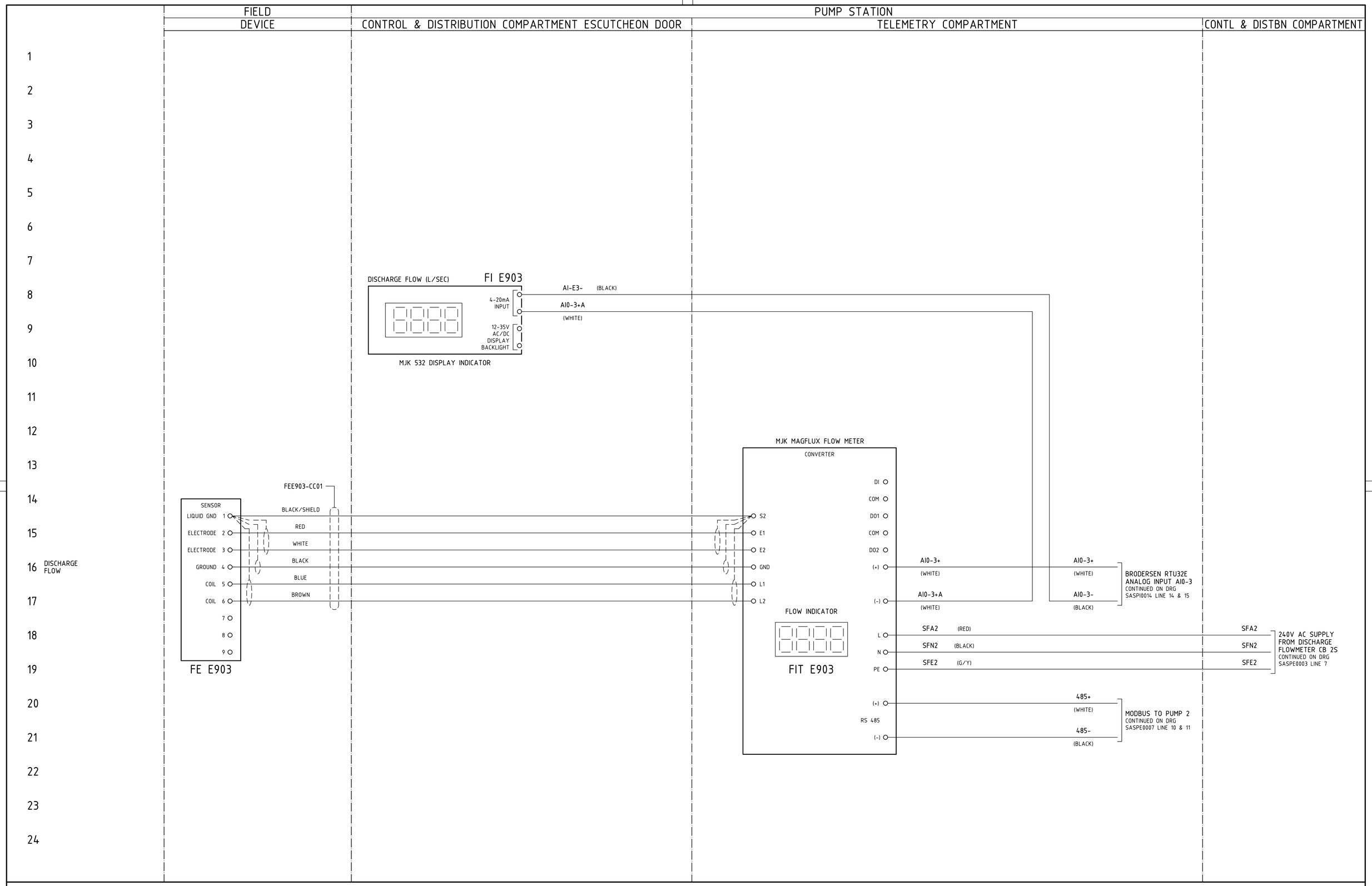

REV NO	DATE	DESIGN REVIEW	REV'D P.MGR	APP'D P.DIR	AMENDMENT
1	24/04/17	SGW/TB	SGW/GB		INITIAL ISSUE TO SGW.
0	29/09/15	SGW/TB	SGW/GB		ISSUED FOR REVIEW

DESIGN CONSULTANT

CLIENT LOGO

South GippslandWater

PROJECT: STANDARD DRAWINGS

LOCATION: SOUTH GIPPSLAND WATER

DRAWN	DRAFTING CHECK	REVIEWED PROJECT MANAGER	APPROVED PROJECT DIRECTOR
OPT/CT	OPT/RJ		
DESIGNED	DESIGN REVIEW		
SGW/TB	SGW/GB		

TITLE

STANDARD SEWERAGE PUMP STATION

PUMP STATION TO 22kW (SOFT STARTER)
DISCHARGE FLOW INSTRUMENT LOOP
ELECTRICAL SCHEMATIC DIAGRAM

SCALE	DRAWING No	REVISION
NTS	SASPE0008	1

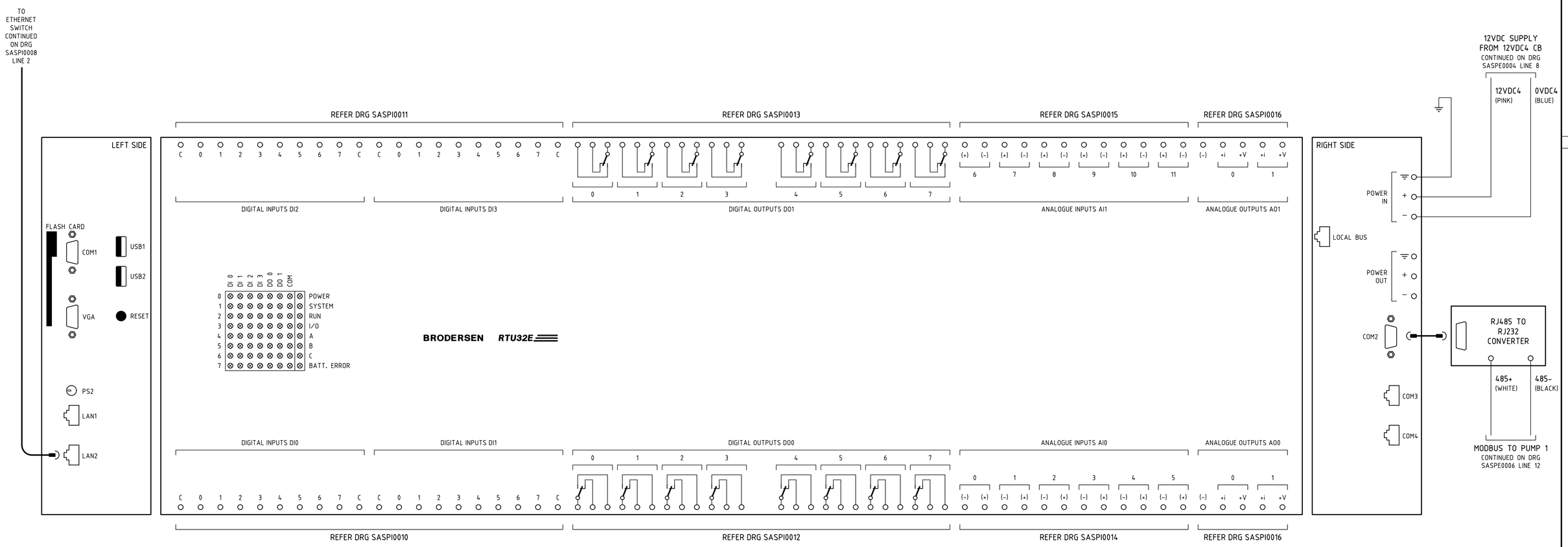

REV NO	DATE	DESIGN REVIEW	REV'D P.MGR	APP'D P.DIR	AMENDMENT
3	24/04/17	SGW/TB	SGW/GB		INITIAL ISSUE TO SGW.
2	09/03/17	SGW/JF	SGW/GB		REVISED FOR NEW ETHERNET/MODEM DETAILS.
1	01/03/17	SGW/TB	SGW/GB		REVISED ETHERNET SOCKET ARRANGEMENT ADDED FIREWALL SWITCH RESET CONTACT.
0	05/11/15	SGW/TB	SGW/GB		ISSUED FOR REVIEW

DESIGN CONSULTANT

CLIENT LOGO

South GippslandWater

PROJECT: STANDARD DRAWINGS

LOCATION: SOUTH GIPPSLAND WATER

DRAWN	DRAFTING CHECK	REVIEWED PROJECT MANAGER	APPROVED PROJECT DIRECTOR
OPT/CT	OPT/RJ		
DESIGNED	DESIGN REVIEW		
SGW/TB	SGW/GB		

TITLE: STANDARD SEWERAGE PUMP STATION
PUMP STATION TO 22kW (SOFT STARTER)
BRODERSEN RTU32E TELEMETRY UNIT
ELECTRICAL SCHEMATIC DIAGRAM

SCALE: NTS | DRAWING No: SASPI0009 | REVISION: 3

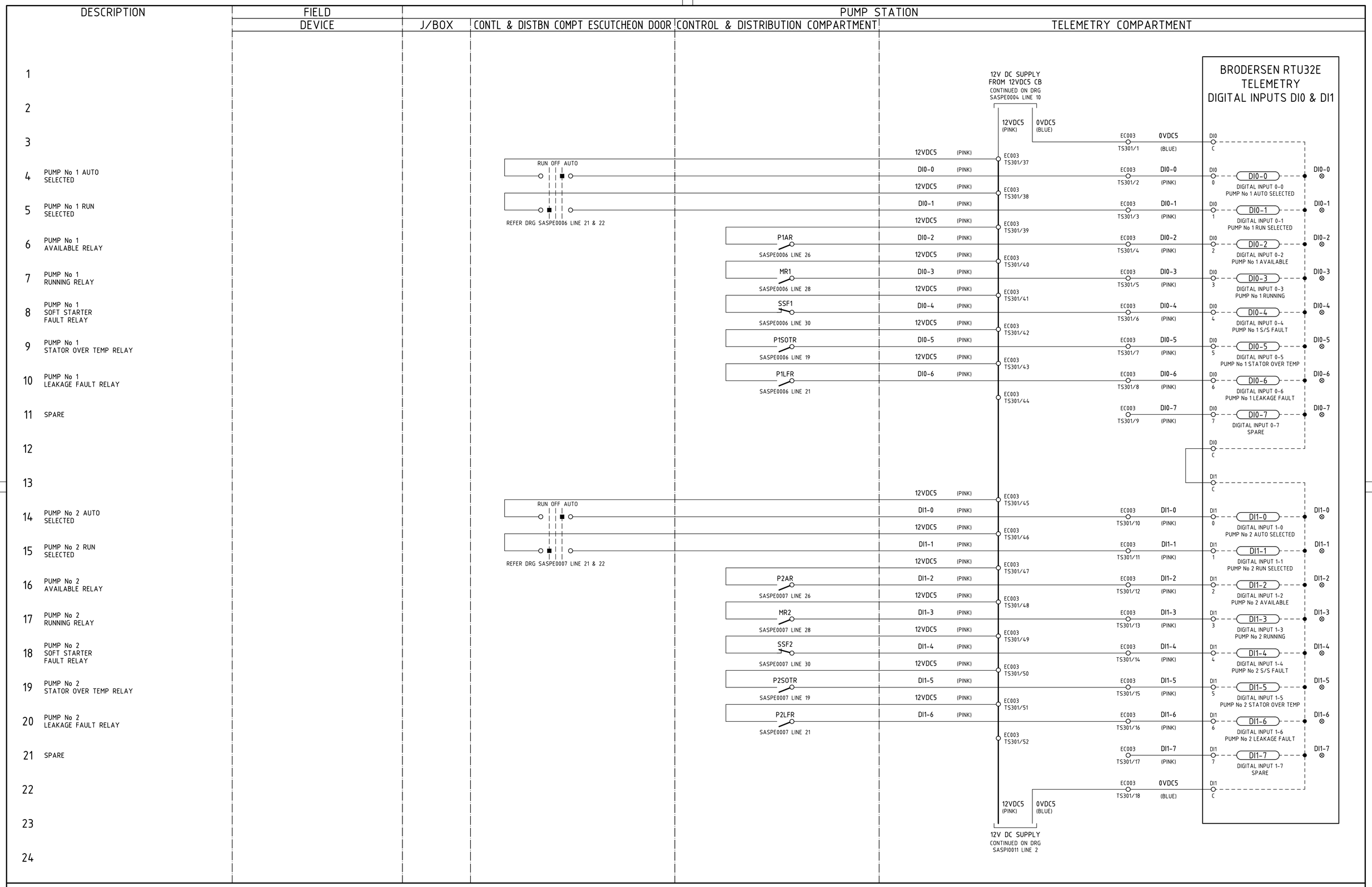

REV NO	DATE	DESIGN REVIEW	REV'D P.MGR	APP'D P.DIR	AMENDMENT
3	24/04/17	SGW/TB	SGW/GB		INITIAL ISSUE TO SGW.
2	01/03/17	SGW/TB	SGW/GB		PUMP TOL CONTACTS NO RETITLED SOFT STARTER FAULT NC.
1	14/06/16	SGW/TB	SGW/GB		DIGITAL INPUTS REALLOCATED TO ACCOMODATE PUMP RUN SELECTED.
0	29/09/15	SGW/TB	SGW/GB		ISSUED FOR REVIEW

DESIGN CONSULTANT

CLIENT LOGO

South GippslandWater

PROJECT: STANDARD DRAWINGS

LOCATION: SOUTH GIPPSLAND WATER

DRAWN	DRAFTING CHECK	REVIEWED PROJECT MANAGER	APPROVED PROJECT DIRECTOR
OPT/CT	OPT/RJ		
DESIGNED SGW/TB	DESIGN REVIEW SGW/GB		

TITLE: STANDARD SEWERAGE PUMP STATION
PUMP STATION TO 22kW (SOFT STARTER)
BRODERSEN RTU32E TELEMETRY DIGITAL INPUTS DI0 & DI1
ELECTRICAL SCHEMATIC DIAGRAM

SCALE	DRAWING No	REVISION
NTS	SASPI0010	3

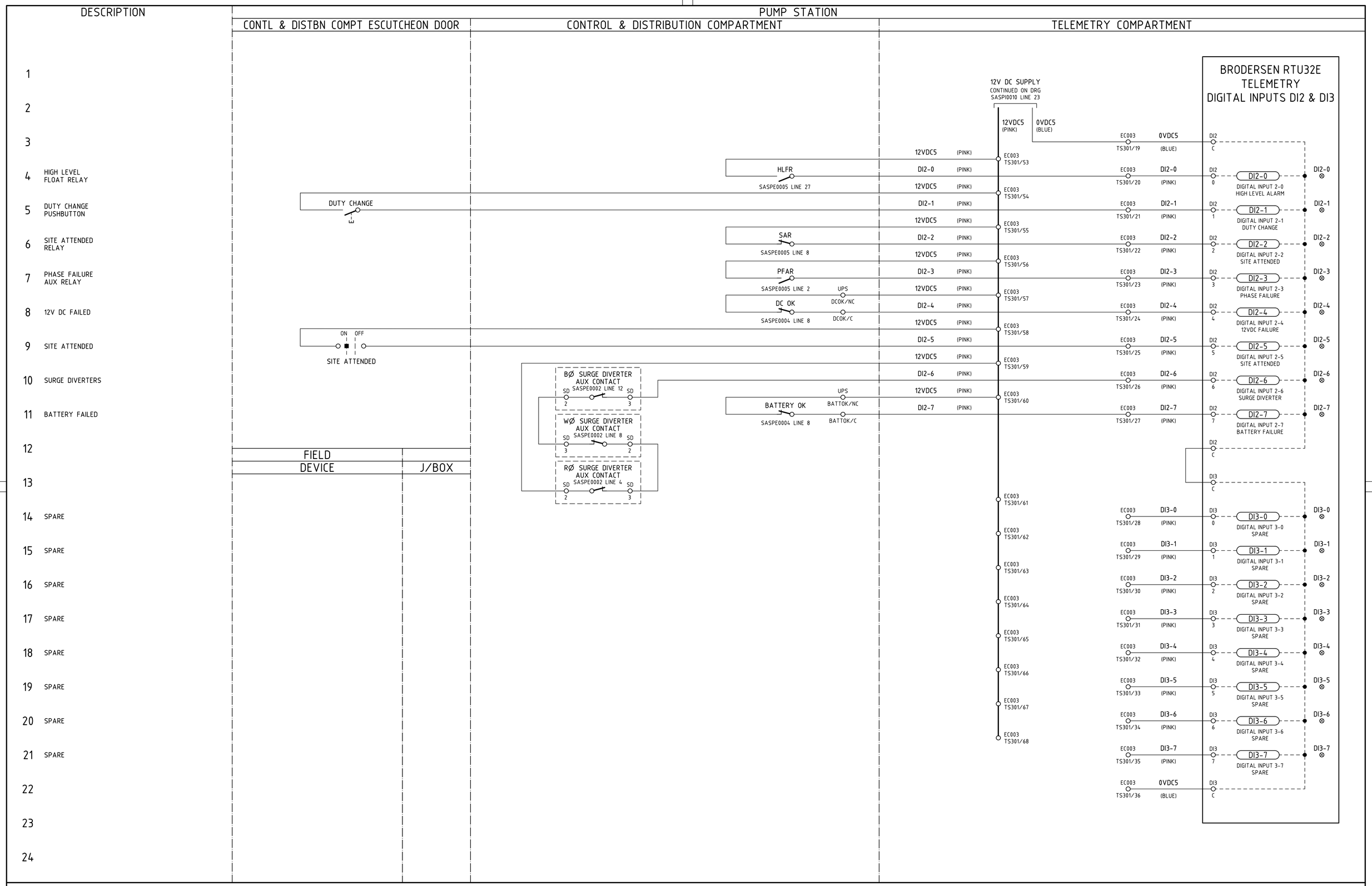

REV NO	DATE	DESIGN REVIEW	REV'D P.MGR	APP'D P.DIR	AMENDMENT
4	24/04/17	SGW/TB	SGW/GB		INITIAL ISSUE TO SGW.
3	01/03/17	SGW/TB	SGW/GB		REVISED SAR, DC OK & BATTERY OK CONTACTS NO TO NC.
2	16/08/16	SGW/TB	SGW/GB		ADDED BATTERY FAILURE DI2-7 DC FAILURE NOW FROM UPS RELAY OUTPUT.
1	14/06/16	SGW/TB	SGW/GB		DIGITAL INPUTS REALLOCATED TO ACCOMODATE PUMP RUN SELECTED.
0	04/11/15	SGW/TB	SGW/GB		ISSUED FOR REVIEW

DESIGN CONSULTANT

CLIENT LOGO

South GippslandWater

PROJECT: STANDARD DRAWINGS

LOCATION: SOUTH GIPPSLAND WATER

DRAWN	DRAFTING CHECK	REVIEWED PROJECT MANAGER	APPROVED PROJECT DIRECTOR
OPT/CT	OPT/RJ		
DESIGNED	DESIGN REVIEW		
SGW/TB	SGW/GB		

TITLE: STANDARD SEWERAGE PUMP STATION
PUMP STATION TO 22kW (SOFT STARTER)
BRODERSEN RTU32E TELEMETRY DIGITAL INPUTS DI2 & DI3
ELECTRICAL SCHEMATIC DIAGRAM

SCALE: NTS | DRAWING No: SASPI0011 | REVISION: 4

DESCRIPTION	FIELD DEVICE	J/BOX	CONTL & DISTBN COMPT ESCUTCHEON DOOR	PUMP STATION: CONTROL & DISTRIBUTION COMPARTMENT	PUMP STATION: TELEMETRY COMPARTMENT
1					
2					
3					
4					
5 PUMP No 1 BACK UP START					
6					
7 PUMP No 1 REMOTE RESET					
8					
9 PUMP No 2 BACK UP START					
10					
11 PUMP No 2 REMOTE RESET					
12					
13 PUMP No 2 DUTY SELECTED					
14					
15 ALTERNATE DUTY SELECTED					
16					
17 RTU FAILURE					
18					
19 COMMS REMOTE RESET					
20					
21					
22					
23					
24					

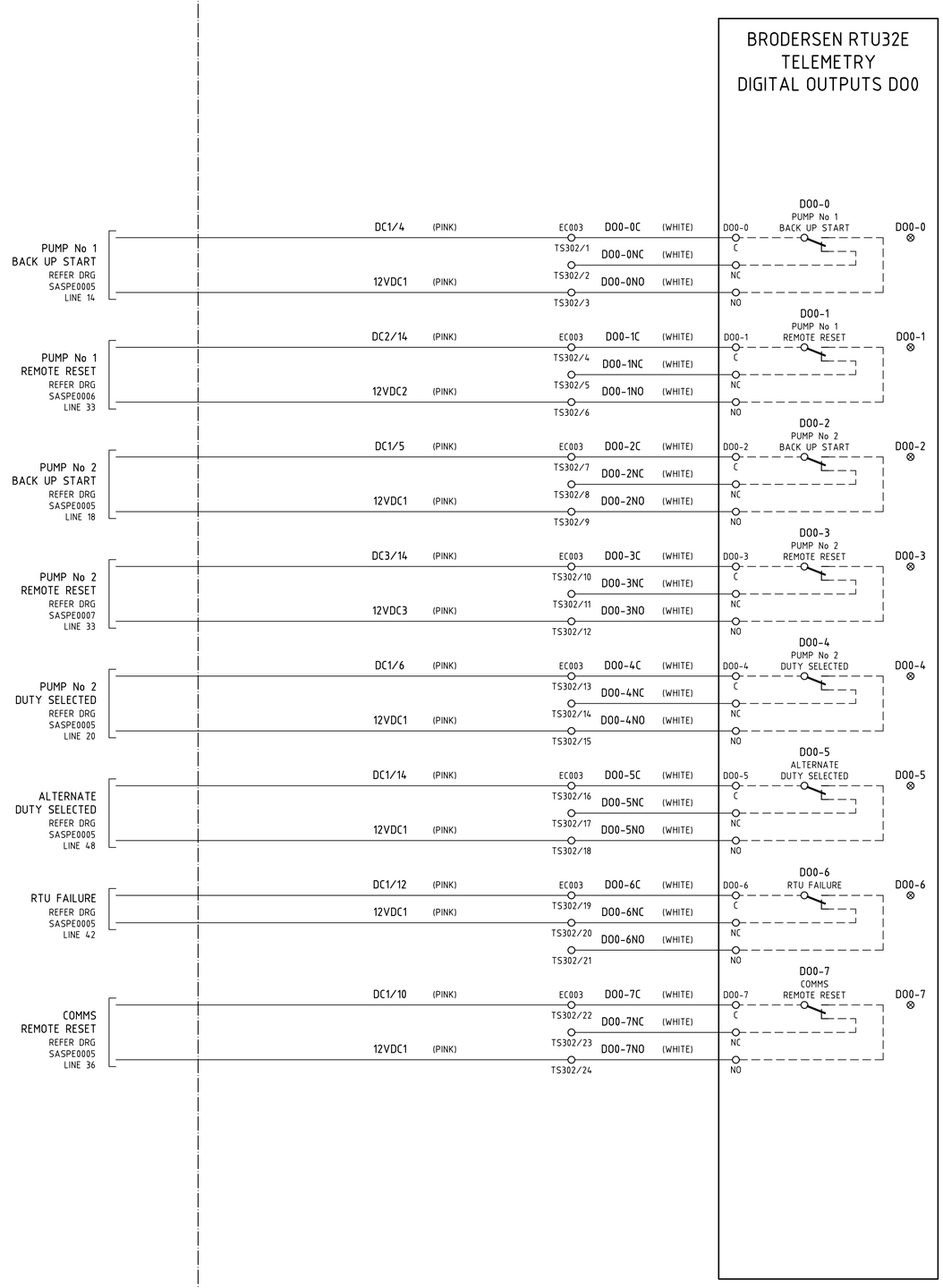

REV NO	DATE	DESIGN REVIEW	REV'D P.MGR	APP'D P.DIR	AMENDMENT
4	24/04/17	SGW/TB	SGW/GB		INITIAL ISSUE TO SGW.
3	01/03/17	SGW/TB	SGW/GB		REVISED 3G MODEM REMOTE RESET TO COMMS REMOTE RESET.
2	17/08/16	SGW/TB	SGW/GB		CORRECTED WIRE NUMBERS IN LINES 7 & 11.
1	03/08/16	SGW/TB	SGW/GB		ADDED 3G MODEM REMOTE RESET WIRING TO DO0-7 LINE 19.
0	29/09/15	SGW/TB	SGW/GB		ISSUED FOR REVIEW

DESIGN CONSULTANT

CLIENT LOGO: South GippslandWater

PROJECT: STANDARD DRAWINGS

LOCATION: SOUTH GIPPSLAND WATER

DRAWN	DRAFTING CHECK	REVIEWED PROJECT MANAGER	APPROVED PROJECT DIRECTOR
OPT/CT	OPT/RJ		
DESIGNED	DESIGN REVIEW		
SGW/TB	SGW/GB		

TITLE: STANDARD SEWERAGE PUMP STATION
PUMP STATION TO 22kW (SOFT STARTER)
BRODERSEN RTU32E TELEMETRY DIGITAL OUTPUTS DO0
ELECTRICAL SCHEMATIC DIAGRAM

SCALE: NTS | DRAWING No: SASPI0012 | REVISION: 4

DESCRIPTION	FIELD DEVICE	J/BOX	CONTL & DISTBN COMPT ESCUTCHEON DOOR	PUMP STATION TELEMETRY COMPARTMENT
1				
2				
3				
4				
5 SPARE				
6				
7 SPARE				
8				
9 SPARE				
10				
11 SPARE				
12				
13 SPARE				
14				
15 SPARE				
16				
17 SPARE				
18				
19 SPARE				
20				
21				
22				
23				
24				

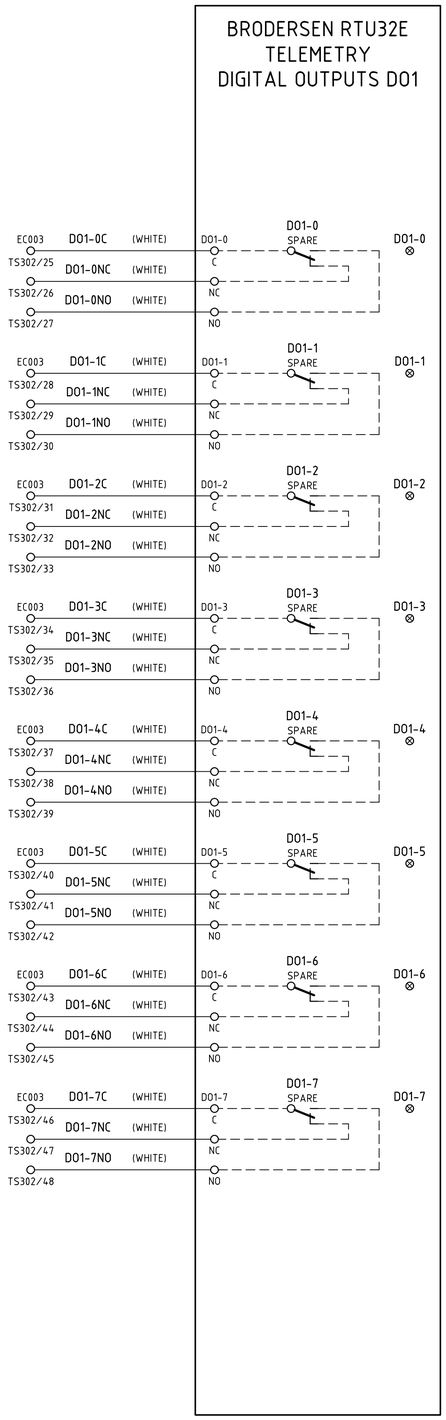

REV NO	DATE	DESIGN REVIEW	REV'D P.MGR	APP'D P.DIR	AMENDMENT
1	24/04/17	SGW/TB	SGW/GB		INITIAL ISSUE TO SGW.
0	04/11/15	SGW/TB	SGW/GB		ISSUED FOR REVIEW

DESIGN CONSULTANT

CLIENT LOGO

South GippslandWater

PROJECT STANDARD DRAWINGS

LOCATION SOUTH GIPPSLAND WATER

DRAWN	DRAFTING CHECK	REVIEWED PROJECT MANAGER	APPROVED PROJECT DIRECTOR
OPT/CT	OPT/RJ		
DESIGNED	DESIGN REVIEW		
SGW/TB	SGW/GB		

TITLE

STANDARD SEWERAGE PUMP STATION

PUMP STATION TO 22kW (SOFT STARTER)
BRODERSEN RTU32E TELEMETRY DIGITAL OUTPUTS DO1
ELECTRICAL SCHEMATIC DIAGRAM

SCALE	DRAWING No	REVISION
NTS	SASPI0013	1

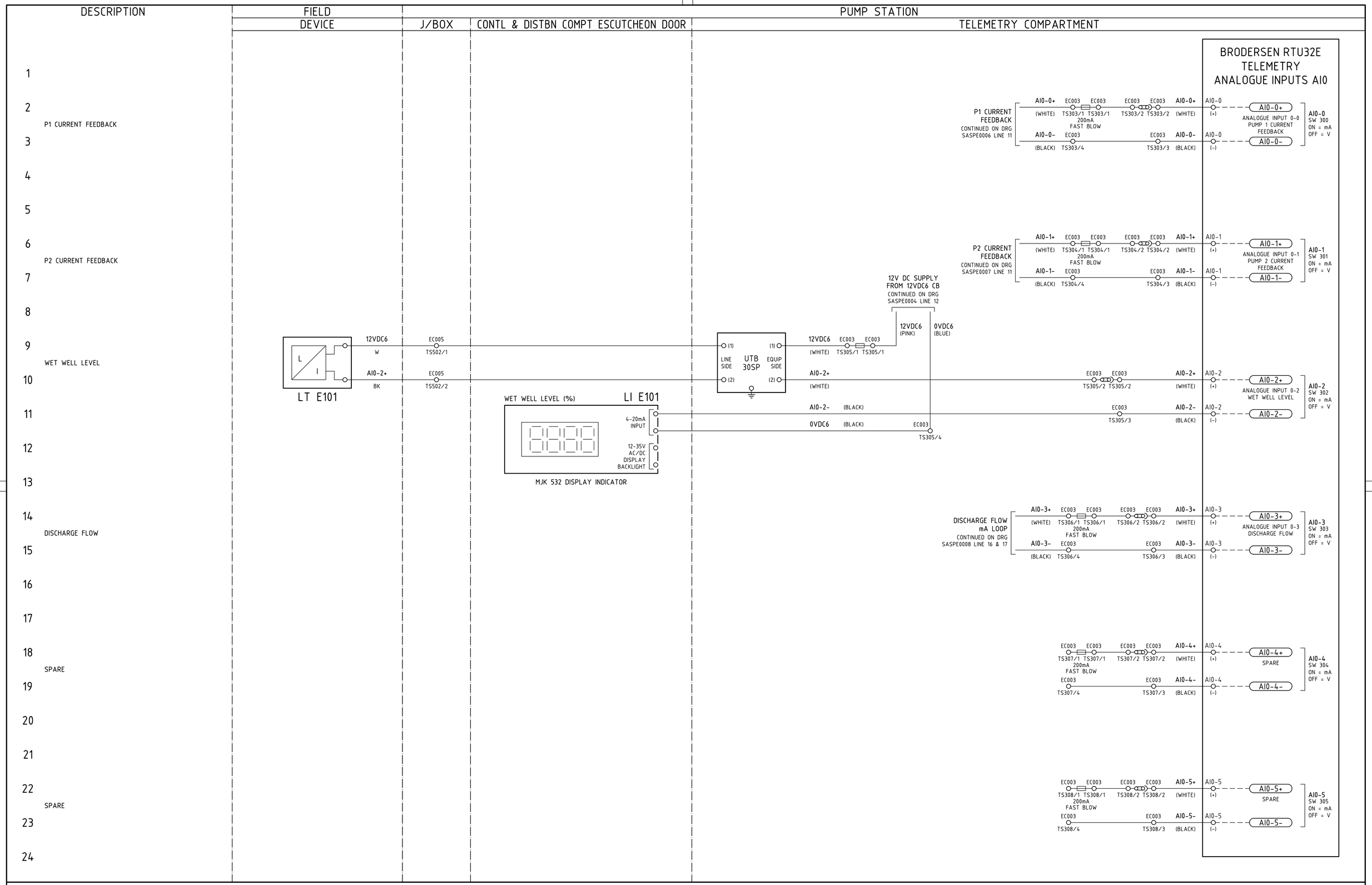

REV NO	DATE	DESIGN REVIEW	REV'D P.MGR	APP'D P.DIR	AMENDMENT
1	24/04/17	SGW/TB	SGW/GB		INITIAL ISSUE TO SGW.
0	29/09/15	SGW/TB	SGW/GB		ISSUED FOR REVIEW

DESIGN CONSULTANT

CLIENT LOGO

South GippslandWater

PROJECT: STANDARD DRAWINGS

LOCATION: SOUTH GIPPSLAND WATER

DRAWN	DRAFTING CHECK	REVIEWED PROJECT MANAGER	APPROVED PROJECT DIRECTOR
OPT/CT	OPT/RJ		
DESIGNED	DESIGN REVIEW		
SGW/TB	SGW/GB		

TITLE

STANDARD SEWERAGE PUMP STATION

PUMP STATION TO 22kW (SOFT STARTER)
BRODERSEN RTU32E TELEMETRY ANALOGUE INPUTS AI0
ELECTRICAL SCHEMATIC DIAGRAM

SCALE	DRAWING No	REVISION
NTS	SASPI0014	1

DESCRIPTION	FIELD DEVICE	J/BOX	CONTROL & DISTRIBUTION COMARTMENT ESCUTCHEON DOOR	PUMP STATION TELEMETRY COMPARTMENT
1				
2 SPARE				
3				
4				
5				
6 SPARE				
7				
8				
9				
10 SPARE				
11				
12				
13				
14 SPARE				
15				
16				
17				
18 SPARE				
19				
20				
21				
22 SPARE				
23				
24				

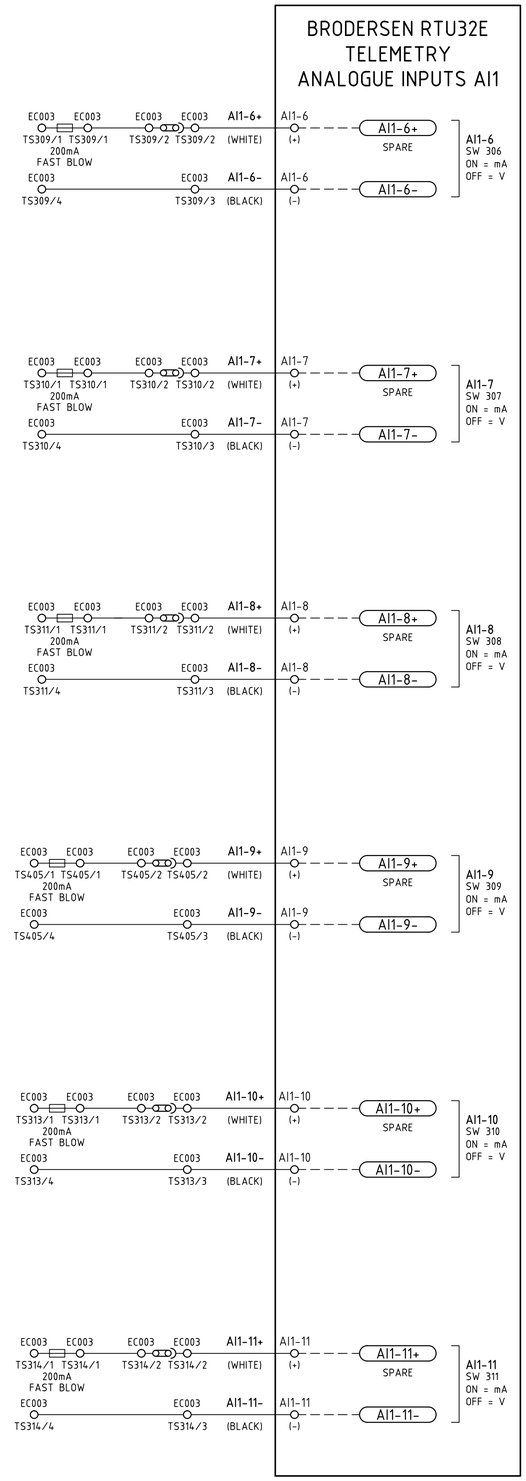

REV NO	DATE	DESIGN REVIEW	REV'D P.MGR	APP'D P.DIR	AMENDMENT
1	24/04/17	SGW/TB	SGW/GB		INITIAL ISSUE TO SGW.
0	05/11/15	SGW/TB	SGW/GB		ISSUED FOR REVIEW

DESIGN CONSULTANT

CLIENT LOGO

South GippslandWater

PROJECT STANDARD DRAWINGS

LOCATION SOUTH GIPPSLAND WATER

DRAWN	DRAFTING CHECK	REVIEWED PROJECT MANAGER	APPROVED PROJECT DIRECTOR
OPT/CT	OPT/RJ		
DESIGNED	DESIGN REVIEW		
SGW/TB	SGW/GB		

TITLE

STANDARD SEWERAGE PUMP STATION

PUMP STATION TO 22kW (SOFT STARTER)
BRODERSEN RTU32E TELEMETRY ANALOGUE INPUTS AI1
ELECTRICAL SCHEMATIC DIAGRAM

SCALE	DRAWING No	REVISION
NTS	SASPI0015	1

DESCRIPTION	FIELD DEVICE	J/BOX	CONTROL & DISTRIBUTION COMPARTMENT	PUMP STATION TELEMETRY COMPARTMENT
1				
2				
3				
4				
5				
6				
7				
8				
9 SPARE				
10				
11				
12				
13 SPARE				
14				
15				
16				
17				
18				
19				
20				
21				
22				
23				
24				

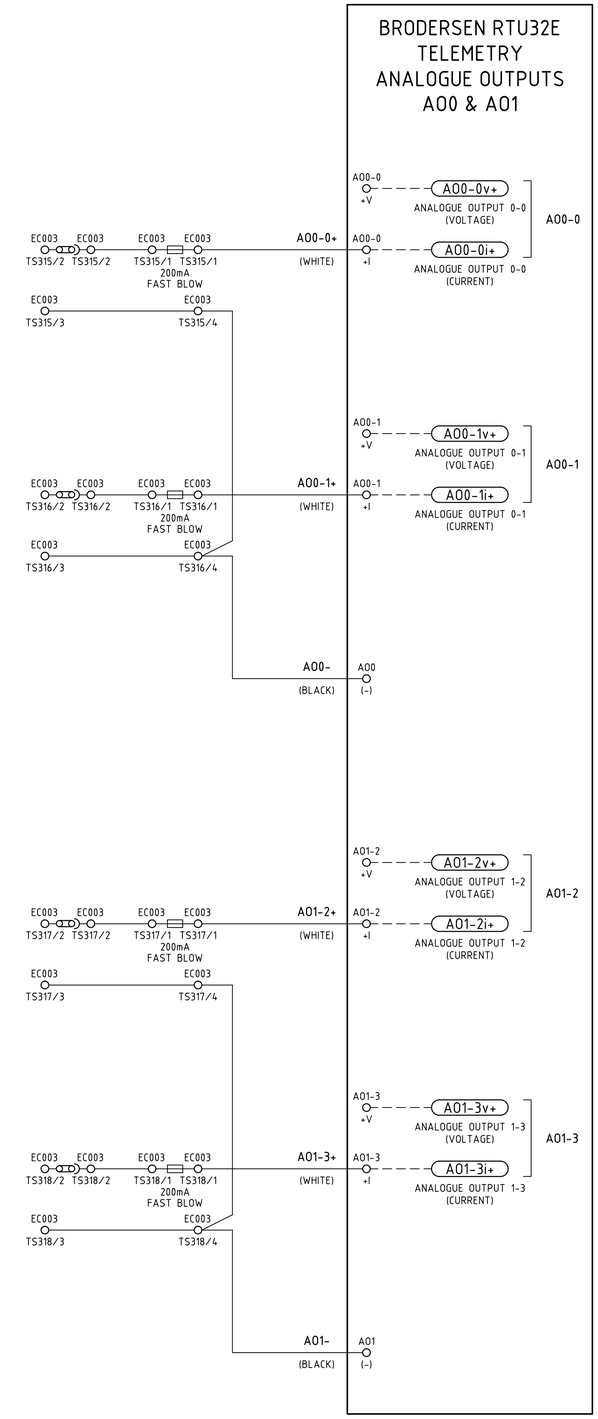

REV NO	DATE	DESIGN REVIEW	REV'D P.MGR	APP'D P.DIR	AMENDMENT
1	24/04/17	SGW/TB	SGW/GB		INITIAL ISSUE TO SGW.
0	21/10/15	SGW/TB	SGW/GB		ISSUED FOR REVIEW

DESIGN CONSULTANT

CLIENT LOGO

South GippslandWater

PROJECT STANDARD DRAWINGS

LOCATION SOUTH GIPPSLAND WATER

DRAWN	DRAFTING CHECK	REVIEWED PROJECT MANAGER	APPROVED PROJECT DIRECTOR
OPT/CT	OPT/RJ		
DESIGNED	DESIGN REVIEW		
SGW/TB	SGW/GB		

TITLE

STANDARD SEWERAGE PUMP STATION

PUMP STATION TO 22kW (SOFT STARTER)
BRODERSEN RTU32E TELEMETRY ANALOGUE OUTPUTS AO0 & AO1
ELECTRICAL SCHEMATIC DIAGRAM

SCALE	DRAWING No	REVISION
NTS	SASPI0016	1

ABBREVIATIONS

LT E101	- LEVEL TRANSMITTER
LI E101	- LEVEL INDICATOR
DPOR	- LEVEL DUTY PUMP OPERATE
SPOR	- LEVEL STANDBY PUMP OPERATE
LSH E102	- LEVEL HIGH
FIT E903	- FLOW INDICATING TRANSMITTER
FE E903	- FLOW SENSING ELEMENT
FI E903	- FLOW INDICATOR
RTU	- PUMP STATION TELEMETRY UNIT
RELAY	- PUMP STATION RELAY LOGIC

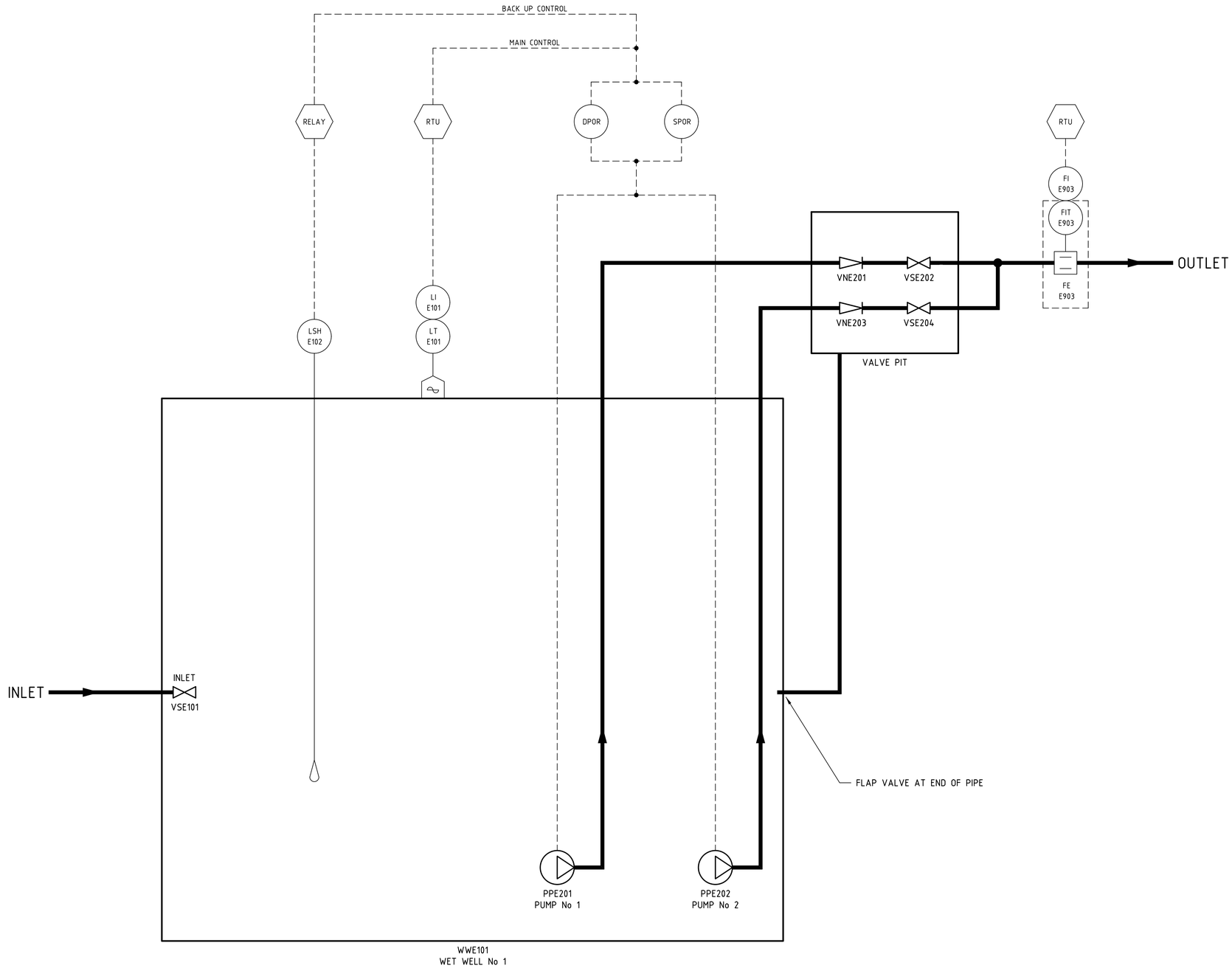

REV NO	DATE	DESIGN REVIEW	REV'D P.MGR	APP'D P.DIR	AMENDMENT
1	24/04/17	SGW/TB	SGW/GB		INITIAL ISSUE TO SGW.
0	29/09/15	SGW/TB	SGW/GB		ISSUED FOR REVIEW

DESIGN CONSULTANT

CLIENT LOGO

South GippslandWater

PROJECT: STANDARD DRAWINGS

LOCATION: SOUTH GIPPSLAND WATER

DRAWN	DRAFTING CHECK	REVIEWED PROJECT MANAGER	APPROVED PROJECT DIRECTOR
OPT/CT	OPT/RJ		
DESIGNED	DESIGN REVIEW		
SGW/TB	SGW/GB		

TITLE: STANDARD SEWERAGE PUMP STATION
PUMP STATION TO 22kW (SOFT STARTER)
PROCESS & INSTRUMENTATION
DIAGRAM

SCALE	DRAWING No	REVISION
NTS	SASPI0017	1

STANDARD WIRING COLOUR CODING

CIRCUIT / CABLE	COLOUR
POWER	
3 PHASE LOW VOLTAGE POWER	RED / WHITE / BLUE
230 V AC ACTIVE (CONTROL)	RED
AC NEUTRAL	BLACK
ANALOGUE 4 to 20mA	
POSITIVE +	WHITE
NEGATIVE -	BLACK
24 V AC	
24 V AC A	BROWN
24 V AC N	GREY
24V DC FED FROM EXTERNAL SUPPLY FOR INSTRUMENTATION AND CONTROL WIRING	
+24 V DC	ORANGE
0 V DC	PURPLE
12V DC FED FROM AND RTU / ALARM DIALLER	
+12 V DC	PINK
0 V DC	BLUE
VOLTAGE FREE SWITCHING	WHITE
EARTH CONDUCTORS	GREEN/YELLOW

mA LOOP TERMINAL WIRING

* PREFIX FOR mA LOOP FERRULE
# SUFFIX FOR DC SUPPLY FERRULE

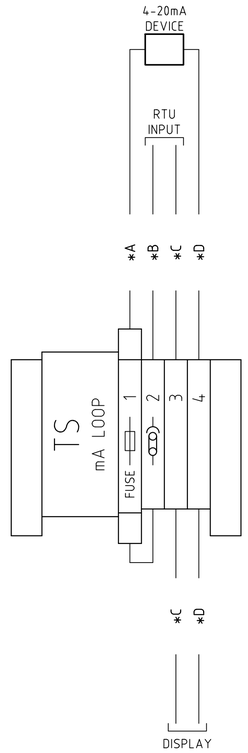

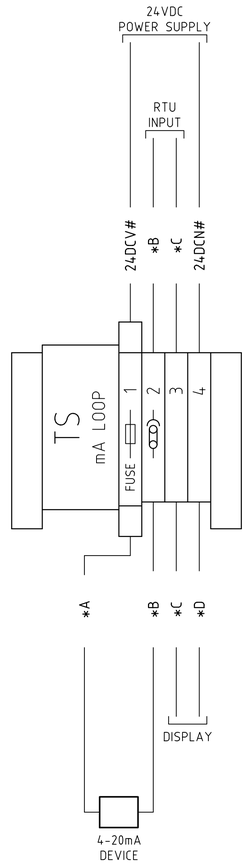

REV NO	DATE	DESIGN REVIEW	REV'D P.MGR	APP'D P.DIR	AMENDMENT
1	24/04/17	SGW/TB	SGW/GB		INITIAL ISSUE TO SGW.
0	29/09/15	SGW/TB	SGW/GB		ISSUED FOR REVIEW

DESIGN CONSULTANT

CLIENT LOGO

South GippslandWater

PROJECT: STANDARD DRAWINGS

LOCATION: SOUTH GIPPSLAND WATER

DRAWN	DRAFTING CHECK	REVIEWED PROJECT MANAGER	APPROVED PROJECT DIRECTOR
OPT/CT	OPT/RJ		
DESIGNED	DESIGN REVIEW		
SGW/TB	SGW/GB		

TITLE: STANDARD SEWERAGE PUMP STATION
PUMP STATION TO 22kW (SOFT STARTER)
STANDARD WIRING COLOUR CODING
mA LOOP TERMINAL WIRING

SCALE	DRAWING No.	REVISION
NTS	SASPG0002	1

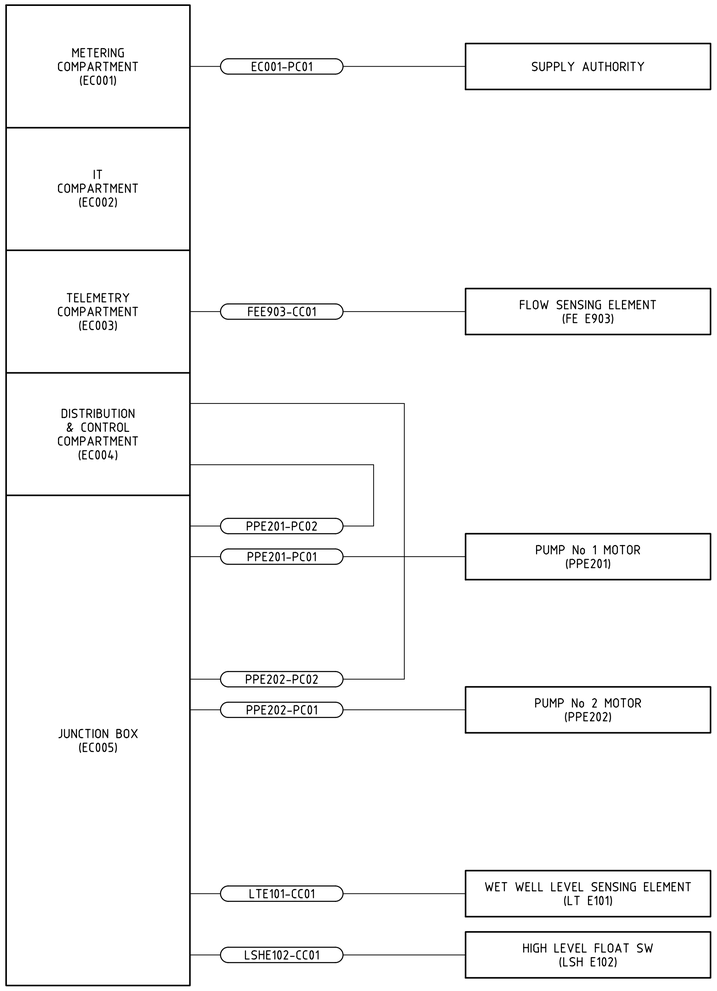

CABLE NUMBER	FROM DESCRIPTION	TO DESCRIPTION	CORES	SIZE (mm^2)	MATERIAL
EC001-PC01	SUPPLY AUTHORITY	METERING COMPARTMENT (PF1EP01)	4C	REFER TABLE BELOW	X90 COPPER
PPE201-PC01	JUNCTION BOX (EC005)	PUMP No 1 MOTOR (PPE201)	3C + E +2C Control	REFER TABLE BELOW	X90 COPPER SUBMERSIBLE
PPE201-PC02	DISTRIBUTION & CONTROL COMPARTMENT (EC004)	JUNCTION BOX (EC005)	3C + E +2C Control	REFER TABLE BELOW	X90 COPPER
PPE202-PC01	JUNCTION BOX (EC005)	PUMP No 2 MOTOR (PPE202)	3C + E +2C Control	REFER TABLE BELOW	X90 COPPER SUBMERSIBLE
PPE202-PC02	DISTRIBUTION & CONTROL COMPARTMENT (EC004)	JUNCTION BOX (EC005)	3C + E +2C Control	REFER TABLE BELOW	X90 COPPER
FEE903-CC01	TELEMETRY COMPARTMENT (EC003)	FLOW SENSING ELEMENT (FE E903)	-	-	MANUFACTURER CABLE
LTE101-CC01	JUNCTION BOX (EC005)	LEVEL SENSING ELEMENT (LT E101)	-	-	MANUFACTURER CABLE
LSHE102-CC01	JUNCTION BOX (EC005)	HIGH LEVEL FLOAT SW (LSH E102)	2C + E	1.5	X90 COPPER SUBMERSIBLE

SUPPLY CABLE SIZE	
MOTOR RATING	CABLE SIZE
7.5kW TO 18.5kW	$16mm^2$
22kW	$25mm^2$

MOTOR CABLE SIZE		
MOTOR RATING	SS RATING	CABLE SIZE
7.5kW	21 A	$4mm^2$
15kW	37 A	$6mm^2$
18.5kW	43 A	$10mm^2$
22kW	53 A	$10mm^2$

REV NO	DATE	DESIGN REVIEW	REV'D P.MGR	APP'D P.DIR	AMENDMENT
1	24/04/17	SGW/TB	SGW/GB		INITIAL ISSUE TO SGW.
0	30/09/15	SGW/TB	SGW/GB		ISSUED FOR REVIEW

DESIGN CONSULTANT

CLIENT LOGO

South GippslandWater

PROJECT STANDARD DRAWINGS

LOCATION SOUTH GIPPSLAND WATER

DRAWN	DRAFTING CHECK	REVIEWED PROJECT MANAGER	APPROVED PROJECT DIRECTOR
OPT/CT	OPT/RJ		
DESIGNED	DESIGN REVIEW		
SGW/TB	SGW/GB		

TITLE

STANDARD SEWERAGE PUMP STATION

PUMP STATION TO 22kW (SOFT STARTER)
CABLE BLOCK & CABLE LISTING
DIAGRAM

SCALE	DRAWING No.	REVISION
NTS	SASPG0003	1

PARTS LIST

No	ITEM	BRAND	PART NUMBER
1	4 - POLE MAIN SWITCH	KRAUS & NAIMER	C80 A213-600VE AUS0113 BREAK BEFORE MAKE
2	**NORMAL SUPPLY MAIN SWITCH CB**		
	PUMP SIZE 7.5 kW - 63A	TERASAKI DIN-T10 SERIES	DTCB10363C
	PUMP SIZE 15 kW TO 22kW - 80A	TERASAKI DIN-T10H SERIES	DTCB10H380C
	-	-	-
3	**GENERATOR SUPPLY MAIN SWITCH CB**		
	PUMP SIZE 7.5 kW - 50A	TERASAKI DIN-T10 SERIES	DTCB10350C
	PUMP SIZE 15 kW TO 22kW - 80A	TERASAKI DIN-T10H SERIES	DTCB10H380C
	-	-	-
4	**CIRCUIT BREAKER**		
4A	32A CB	TERASAKI DIN-T6 SERIES	DTCB6132C
4B	2A CB	TERASAKI DIN-T6 SERIES	DTCB6102C
4C	20A CB	TERASAKI DIN-T6 SERIES	DTCB6120C
4D	6A CB	TERASAKI DIN-T6 SERIES	DTCB6106C
5	**PUMP CIRCUIT BREAKER**		
	PUMP SIZE 7.5kW - 25A	TERASAKI DIN-T6 SERIES	DTCB6325C
	PUMP SIZE 15kW - 40A	TERASAKI DIN-T6 SERIES	DTCB6340C
	PUMP SIZE 18.5kW - 50A	TERASAKI DIN-T6 SERIES	DTCB6350C
	PUMP SIZE 22kW - 63A	TERASAKI DIN-T6 SERIES	DTCB6363B
	--	--	--
6	16A 1Ø RCD	TERASAKI DIN-SAFE 6kA	DSRCB-S-16-30-C
7	PHASE FAIL RELAY	CARLO GAVAZZI	DPB-01-C-M48
8	SURGE DIVERTER	TITAN	DR1P20K230SDC
9A	TS401 TS401 NEUTRAL SURGE TERMINAL STRIP (EC004)	--	--
	NAME PLATE HOLDER	WEIDMULLER	TS35 SIGHTS & COVER
	TERMINALS	WEIDMULLER	WDU SERIES
	END STOP	WEIDMULLER	WEW 35/2
	TERMINAL BRIDGING	WEIDMULLER	--
9B	TS402 TS402 EARTH SURGE TERMINAL STRIP (EC004)	--	--
	NAME PLATE HOLDER	WEIDMULLER	SCHT 5 S
	EARTH TERMINALS	WEIDMULLER	WDU SERIES
	TERMINAL BRIDGING	WEIDMULLER	--
10	SURGE FILTER	CRITEC	DSF 20A 275V
11	**SOFT STARTER - DANFOSS MCD 500 SERIES**		
	B: INTERNALLY BYPASSED		
	T5: 200 - 525 VAC		
	G1: FRAME SIZE 1		
	IP20, CV: 240VAC		
	PUMP SIZE 7.5kW - 21A	DANFOSS	175G5525
	PUMP SIZE 15kW - 37A	DANFOSS	175G5526
	PUMP SIZE 18.5kW - 43A	DANFOSS	175G5527
	PUMP SIZE 22kW - 53A	DANFOSS	175G5528
	REMOTE CONTROL PANEL LCP 501	DANFOSS	175G0096
11A	MCD MODBUS MODULE	DANFOSS	175G9000
12	DC CIRCUIT BREAKER		
12A	2A CIRCUIT BREAKER	TERASAKI DIN-T DC SERIES	DTCBDC102C
12B	--	--	--
12C	6A CIRCUIT BREAKER (2 POLE)	TERASAKI DIN-T DC SERIES	DTCBDC206C
13	12V DC UPS/BATTERY CHARGER	POWERBOX	PB256-1210CML
14	12V DC 50A PLUG CONNECTOR	ANDERSON PLUG (GREY)	SB50
15	--	--	--
	TS403 TERMINAL STRIP (EC004)	--	--
	NAME PLATE HOLDER	WEIDMULLER	SCHT 5 S
	TERMINALS	WEIDMULLER	WDU SERIES
	EARTH TERMINALS	WEIDMULLER	WDU SERIES
	END STOP	WEIDMULLER	WEW 35/2
16	TS405 TERMINAL STRIP (EC004)	--	--
	NAME PLATE HOLDER	WEIDMULLER	SCHT 5 S
	TERMINALS	WEIDMULLER	WDU SERIES
	END STOP	WEIDMULLER	WEW 35/2
	TERMINAL BRIDGING	WEIDMULLER	--
17	TS404 TERMINAL STRIP (EC004)	--	--
	NAME PLATE HOLDER	WEIDMULLER	SCHT 5 S
	TERMINALS	WEIDMULLER	WDU SERIES
	END STOP	WEIDMULLER	WEW 35/2
	TERMINAL BRIDGING	WEIDMULLER	--
18	4G WIFI M2M DATA ROUTER	NETCOMM	NTC-140W
19	RELAY BASE	FINDER	90.21
20	MINICAS2 TEMPERATURE AND LEAKAGE SENSOR RELAY	FLYGT	40 501560 230V AC
21	RELAY BASE	FINDER	94.04
22	CONTROL RELAY	FINDER	55.34.9.012.004 12V DC
23	TIMER RELAY	OMRON	H3CR-A
24	--	--	--
25	--	--	--
26	RTU32E UNIVERSAL CONTROLLER	BRODERSEN	BRE-6410/231B0131.D1
27	AUTO DIALLER	EDAC	EDAC 400
28	SINGLE ETHERNET OUTLET	--	--
29			
30			

PARTS LIST

No	ITEM	BRAND	PART NUMBER
31	TS301 TERMINAL STRIP (EC003)	--	
	NAME PLATE HOLDER	WEIDMULLER	SCHT 5 S
	TERMINALS	WEIDMULLER	WDU SERIES
	END STOP	WEIDMULLER	WEW 35/2
	TERMINAL BRIDGING	WEIDMULLER	--
32	TS302 TERMINAL STRIP (EC003)	--	--
	NAME PLATE HOLDER	WEIDMULLER	SCHT 5 S
	TERMINALS	WEIDMULLER	WDU SERIES
	END STOP	WEIDMULLER	WEW 35/2
	TERMINAL BRIDGING	WEIDMULLER	--
33	TS303 TERMINAL STRIP (EC003)	--	--
	NAME PLATE HOLDER	WEIDMULLER	SCHT 5 S
	FUSE TERMINAL	WEIDMULLER	WS16
	SPADE TERMINAL	WEIDMULLER	WTR SERIES
	TERMINALS	WEIDMULLER	WDU SERIES
	END STOP	WEIDMULLER	WEW 35/2
34	TS304 TERMINAL STRIP (EC003)	--	--
	NAME PLATE HOLDER	WEIDMULLER	SCHT 5 S
	FUSE TERMINAL	WEIDMULLER	WS16
	SPADE TERMINAL	WEIDMULLER	WTR SERIES
	TERMINALS	WEIDMULLER	WDU SERIES
	END STOP	WEIDMULLER	WEW 35/2
35	TS305 TERMINAL STRIP (EC003)	--	--
	NAME PLATE HOLDER	WEIDMULLER	SCHT 5 S
	FUSE TERMINAL	WEIDMULLER	WS16
	SPADE TERMINAL	WEIDMULLER	WTR SERIES
	TERMINALS	WEIDMULLER	WDU SERIES
	END STOP	WEIDMULLER	WEW 35/2
	CRITEC TRANSIENT BARRIER	ERICO CRITEC	UTB30SP
36	TS306 TERMINAL STRIP (EC003)	--	--
	NAME PLATE HOLDER	WEIDMULLER	SCHT 5 S
	FUSE TERMINAL	WEIDMULLER	WS16
	SPADE TERMINAL	WEIDMULLER	WTR SERIES
	TERMINALS	WEIDMULLER	WDU SERIES
	END STOP	WEIDMULLER	WEW 35/2
37	TS307 TERMINAL STRIP (EC003)	--	--
	NAME PLATE HOLDER	WEIDMULLER	SCHT 5 S
	FUSE TERMINAL	WEIDMULLER	WS16
	SPADE TERMINAL	WEIDMULLER	WTR SERIES
	TERMINALS	WEIDMULLER	WDU SERIES
	END STOP	WEIDMULLER	WEW 35/2
38	TS308 TERMINAL STRIP (EC003)	--	--
	NAME PLATE HOLDER	WEIDMULLER	SCHT 5 S
	FUSE TERMINAL	WEIDMULLER	WS16
	SPADE TERMINAL	WEIDMULLER	WTR SERIES
	TERMINALS	WEIDMULLER	WDU SERIES
	END STOP	WEIDMULLER	WEW 35/2
39	TS309 TERMINAL STRIP (EC003)	--	--
	NAME PLATE HOLDER	WEIDMULLER	SCHT 5 S
	FUSE TERMINAL	WEIDMULLER	WS16
	SPADE TERMINAL	WEIDMULLER	WTR SERIES
	TERMINALS	WEIDMULLER	WDU SERIES
	END STOP	WEIDMULLER	WEW 35/2
40	TS310 TERMINAL STRIP (EC003)	--	--
	NAME PLATE HOLDER	WEIDMULLER	SCHT 5 S
	FUSE TERMINAL	WEIDMULLER	WS16
	SPADE TERMINAL	WEIDMULLER	WTR SERIES
	TERMINALS	WEIDMULLER	WDU SERIES
	END STOP	WEIDMULLER	WEW 35/2
41	TS311 TERMINAL STRIP (EC003)	--	--
	NAME PLATE HOLDER	WEIDMULLER	SCHT 5 S
	FUSE TERMINAL	WEIDMULLER	WS16
	SPADE TERMINAL	WEIDMULLER	WTR SERIES
	TERMINALS	WEIDMULLER	WDU SERIES
	END STOP	WEIDMULLER	WEW 35/2
42	TS405 TERMINAL STRIP (EC003)	--	--
	NAME PLATE HOLDER	WEIDMULLER	SCHT 5 S
	FUSE TERMINAL	WEIDMULLER	WS16
	SPADE TERMINAL	WEIDMULLER	WTR SERIES
	TERMINALS	WEIDMULLER	WDU SERIES
	END STOP	WEIDMULLER	WEW 35/2
43	TS313 TERMINAL STRIP (EC003)	--	--
	NAME PLATE HOLDER	WEIDMULLER	SCHT 5 S
	FUSE TERMINAL	WEIDMULLER	WS16
	SPADE TERMINAL	WEIDMULLER	WTR SERIES
	TERMINALS	WEIDMULLER	WDU SERIES
	END STOP	WEIDMULLER	WEW 35/2
44	TS314 TERMINAL STRIP (EC003)	--	--
	NAME PLATE HOLDER	WEIDMULLER	SCHT 5 S
	FUSE TERMINAL	WEIDMULLER	WS16
	SPADE TERMINAL	WEIDMULLER	WTR SERIES
	TERMINALS	WEIDMULLER	WDU SERIES
	END STOP	WEIDMULLER	WEW 35/2

PARTS LIST

No	ITEM	BRAND	PART NUMBER
45	TS315 TERMINAL STRIP (EC003)	--	--
	NAME PLATE HOLDER	WEIDMULLER	SCHT 5 S
	FUSE TERMINAL	WEIDMULLER	WS16
	SPADE TERMINAL	WEIDMULLER	WTR SERIES
	TERMINALS	WEIDMULLER	WDU SERIES
	END STOP	WEIDMULLER	WEW 35/2
46	TS316 TERMINAL STRIP (EC003)	--	--
	NAME PLATE HOLDER	WEIDMULLER	SCHT 5 S
	FUSE TERMINAL	WEIDMULLER	WS16
	SPADE TERMINAL	WEIDMULLER	WTR SERIES
	TERMINALS	WEIDMULLER	WDU SERIES
	END STOP	WEIDMULLER	WEW 35/2
47	TS317 TERMINAL STRIP (EC003)	--	--
	NAME PLATE HOLDER	WEIDMULLER	SCHT 5 S
	FUSE TERMINAL	WEIDMULLER	WS16
	SPADE TERMINAL	WEIDMULLER	WTR SERIES
	TERMINALS	WEIDMULLER	WDU SERIES
	END STOP	WEIDMULLER	WEW 35/2
48	TS318 TERMINAL STRIP (EC003)	--	--
	NAME PLATE HOLDER	WEIDMULLER	SCHT 5 S
	FUSE TERMINAL	WEIDMULLER	WS16
	SPADE TERMINAL	WEIDMULLER	WTR SERIES
	TERMINALS	WEIDMULLER	WDU SERIES
	END STOP	WEIDMULLER	WEW 35/2
49	FAN THERMOSTAT	COSMOTEC	KTS011141
50	DOUBLE GPO	CLIPSAL	2025H-WE
51A/B	TS501 TERMINAL STRIP (EC005)	--	--
	NAME PLATE HOLDER	WEIDMULLER	SCHT 5 S
	TERMINALS	WEIDMULLER	WDU SERIES
	TERMINAL SEPARATOR	WEIDMULLER	--
	END STOP	WEIDMULLER	WEW 35/2
	TERMINAL BRIDGING	WEIDMULLER	--
52	TS502 TERMINAL STRIP (EC005)	--	--
	NAME PLATE HOLDER	WEIDMULLER	SCHT 5 S
	TERMINALS	WEIDMULLER	WDU SERIES
	END STOP	WEIDMULLER	WEW 35/2
53	FUSE BASE 100/100A (440V HRC CARTRIDGE TO AS2005)	HAGER B&R	LH901
	100A FUSE LINKS	OMEGA	EVC1036
54	HINGE AND PANEL FOR METER ASSEMBLY	HAGER B&R	KCN10022
55	SUPPLY AUTHORITY SMART METER	AMPY	--
56	FLOW METER	MJK	MAGFLUX
57	--	--	--
58	PUMP	--	--
59	**GENERATOR PLUG INLET**		
	PUMP SIZE 7.5kW - 32A	CLIPSAL	56A532
	PUMP SIZE 15kW TO 22kW - 90A	MARECHAL	??????
	100A - GENERATOR PLUG MOUNTING BOX	ABB	1SL085A00
60	COMPARTMENT LIGHT	OCEAN CONTROLS	CSL-1240
61	FAN	COSMOTEC	GKV 1500211
	FAN GRILL & FILTER	COSMOTEC	GKF15
62	NEUTRAL LINK	HAGER B&R	KM06A
63	PILOT LIGHT	SPRECHER + SCHUH	D7 SERIES
64	PUSH BUTTON	SPRECHER + SCHUH	D7 SERIES
65	SELECTOR SWITCH	SPRECHER + SCHUH	D7 SERIES
66	SELECTOR SWITCH	SPRECHER + SCHUH	D7 SERIES
67	PANEL INDICATOR	MJK	532 PART No 200121
68	VOICE MODEM	SIMADO	GFX11
69	ETHERNET SWITCH	MOXA	EDS-408A
70	TS201 TERMINAL STRIP (EC002)	--	--
	NAME PLATE HOLDER	WEIDMULLER	SCHT 5 S
	TERMINALS	WEIDMULLER	WDU SERIES
	END STOP	WEIDMULLER	WEW 35/2
71	--	--	--
72	--	--	--
73	--	--	--
74	EARTH BRAIDS - TYPE MJB - 250mm	ERICO	556650

NOTE 1:
ALL RTU EQUIPMENT DETAILED IN PARTS LIST AVAILABLE FROM SOUTH GIPPSLAND WATER

NOTE 2:
THIS EQUIPMENT IS PREFERRED BY SOUTH GIPPSLAND WATER. THE CONTRACTOR MAY PROPOSE ALTERNATIVES TO THESE, HOWEVER MUST DEMONSTRATE AT THE TIME OF TENDER THAT THE ALTERNATIVE IS ABLE TO MEET (AS A MINIMUM) ALL REQUIREMENTS PROVIDED BY EQUIPMENT ON THIS LIST.

NOTE 3:
FOR MOTOR TERMINAL SIZES REFER TO MOTOR CABLE SIZE TABLE ON DRG SASPG0003

REV NO	DATE	DESIGN REVIEW	REV'D P.MGR	APP'D P.DIR	AMENDMENT
4	24/04/17	SGW/TB	SGW/GB		INITIAL ISSUE TO SGW.
3	09/03/17	SGW/JF	SGW/GB		REVISED FOR NEW ETHERNET SWITCH/MODEM DETAILS.
2	01/03/17	SGW/TB	SGW/GB		ADDED ITEM 11A SOFT STARTER MODBUS MODULE.
1	18/07/16	SGW/TB	SGW/GB		REVISED TS201 DETAILS DUE TO RELOCATION FROM IT COMPARTMENT TO CONTROL COMPARTMENT.
0	30/09/15	SGW/TB	SGW/GB		ISSUED FOR REVIEW

DESIGN CONSULTANT

CLIENT LOGO

South GippslandWater

PROJECT: STANDARD DRAWINGS

LOCATION: SOUTH GIPPSLAND WATER

DRAWN	DRAFTING CHECK	REVIEWED PROJECT MANAGER	APPROVED PROJECT DIRECTOR
OPT/CT	OPT/RJ		
DESIGNED	DESIGN REVIEW		
SGW/TB	SGW/GB		

TITLE: STANDARD SEWERAGE PUMP STATION
PUMP STATION TO 22kW (SOFT STARTER)
PARTS
LIST

SCALE	DRAWING No.	REVISION
NTS	SASPG0004	4

CONSTRUCTION NOTES

IP RATING:	CUBICLE TO BE CONSTRUCTED TO IP56 RATING.
MATERIAL:	3.0mm MARINE GRADE ALUMINIUM.
FINISH:	TO BE POWDER COATED COLORBOND WILDERNESS GREEN.
HINGES:	GRADE 316 STAINLESS STEEL HINGES & PINS WITH LOCKING WASHERS UNDER FIXING SCREWS.
HANDLES:	TO BE SUPPLIED BY CLIENT REQUIRE 3 POINT LOCKING SYSTEM WITH ROLLER ENDS TO BE SUPPLIED BY MANUFACTURER ON DOORS. ALL LOCKS ARE SY3.
GEAR PLATES:	CONTROL & DISTRIBUTION GEAR TRAY - 1020mm HIGH x 910mm WIDE TELEMETRY GEAR TRAY - 620mm HIGH x 880mm WIDE IT GEAR TRAY - 400mm HIGH x 200mm WIDE TO BE POWDER COATED WHITE & FRONT OF GEAR TRAY TO BE 25mm FROM WALL.
ESCUTCHEON DOORS:	TO BE POWDER COATED WHITE & HAVE M4 CHROMED, SLOTTED ROUND HEAD THUMB SCREWS WITH RETAINING CLIP (2 PLACES). TO BE FITTED WITH CABLE SUPPORT RAILS MOUNTED BEHIND.
EXTERNAL VENTS:	B & R EXTERNAL VENT KIT IPVK SUPPLIED WITH GASKET, INSERT FILTER & FIXINGS OR EQUIVALENT. VENTS ARE TO BE SEALED WITH TERMITE MESH.
PLINTH:	ALUMINIUM PREFORMED CHANNEL CONSTRUCTED IN ONE CONTINUOUS LENGTH.
DOOR SEALS:	5060 PVC / NITRILE 6mm THICK OR EQUIVALENT.
DOOR STAYS:	ALL EXTERNAL DOORS TO BE FITTED WITH MECHANICALLY LOCKING ROD TYPE DOOR STAYS TO KEEP DOOR OPEV AT A MINIMUM OF 110 DEGREES.
CABLE SUPPORTS:	10 x 25 CABLE SUPPORT RAILS TO BE MOUNTED ON SIDE OF CABINET'S INTERIOR & ESCUTCHEON AS SHOWN.

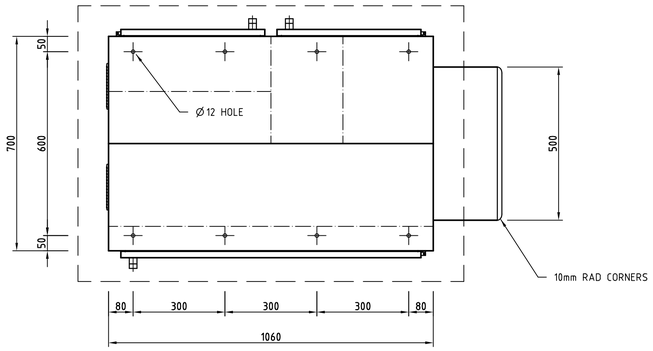

PLAN VIEW

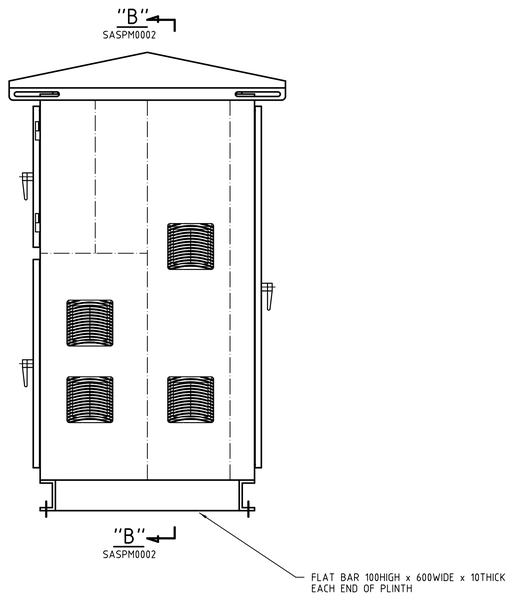

LEFT HAND SIDE ELEVATION

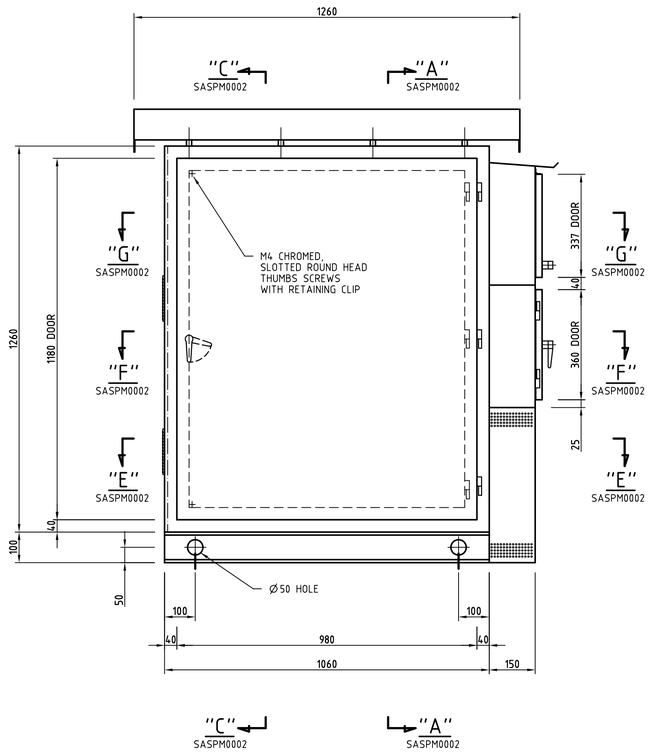

FRONT ELEVATION
(ESCUTCHEON DOORS SHOWN DOTTED)

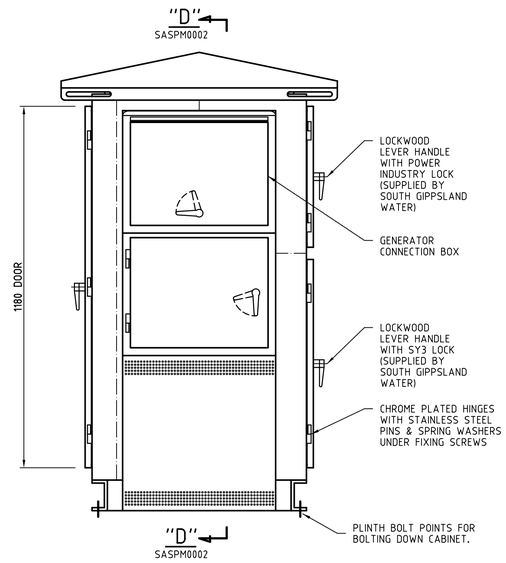

RIGHT HAND SIDE ELEVATION

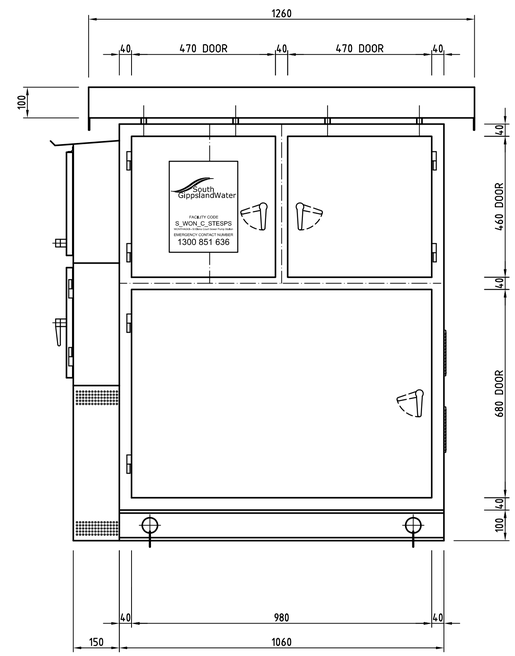

REAR ELEVATION

REV NO	DATE	DESIGN REVIEW	REV'D P.MGR	APP'D P.DIR	AMENDMENT
4	24/04/17	SGW/TB	SGW/GB		INITIAL ISSUE TO SGW.
3	09/03/17	SGW/JF	SGW/GB		RESIZED IT GEAR TRAY FOR NEW ETHERNET SWITCH/MODEM DETAILS.
2	03/08/16	SGW/TB	SGW/GB		ADDED NOTE : VENTS ARE TO BE SEALED WITH TERMITE MESH.
1	18/07/16	SGW/TB	SGW/GB		RESIZED BATTERY COMPARMENT ADDED FLAT BAR TO PLINTH SIDE ELEVATIONS.
0	30/09/15	SGW/TB	SGW/GB		ISSUED FOR REVIEW

DESIGN CONSULTANT

CLIENT LOGO

South GippslandWater

PROJECT: STANDARD DRAWINGS

LOCATION: SOUTH GIPPSLAND WATER

DRAWN	DRAFTING CHECK	REVIEWED PROJECT MANAGER	APPROVED PROJECT DIRECTOR
OPT/CT	OPT/RJ		
DESIGNED SGW/TB	DESIGN REVIEW SGW/GB		

TITLE: STANDARD SEWERAGE PUMP STATION
PUMP STATION TO 22kW (SOFT STARTER)
BACK TO BACK - PUMP STATION CUBICLE
GENERAL ARRANGEMENT

SCALE	DRAWING No	REVISION
NTS	SASPM0001	4

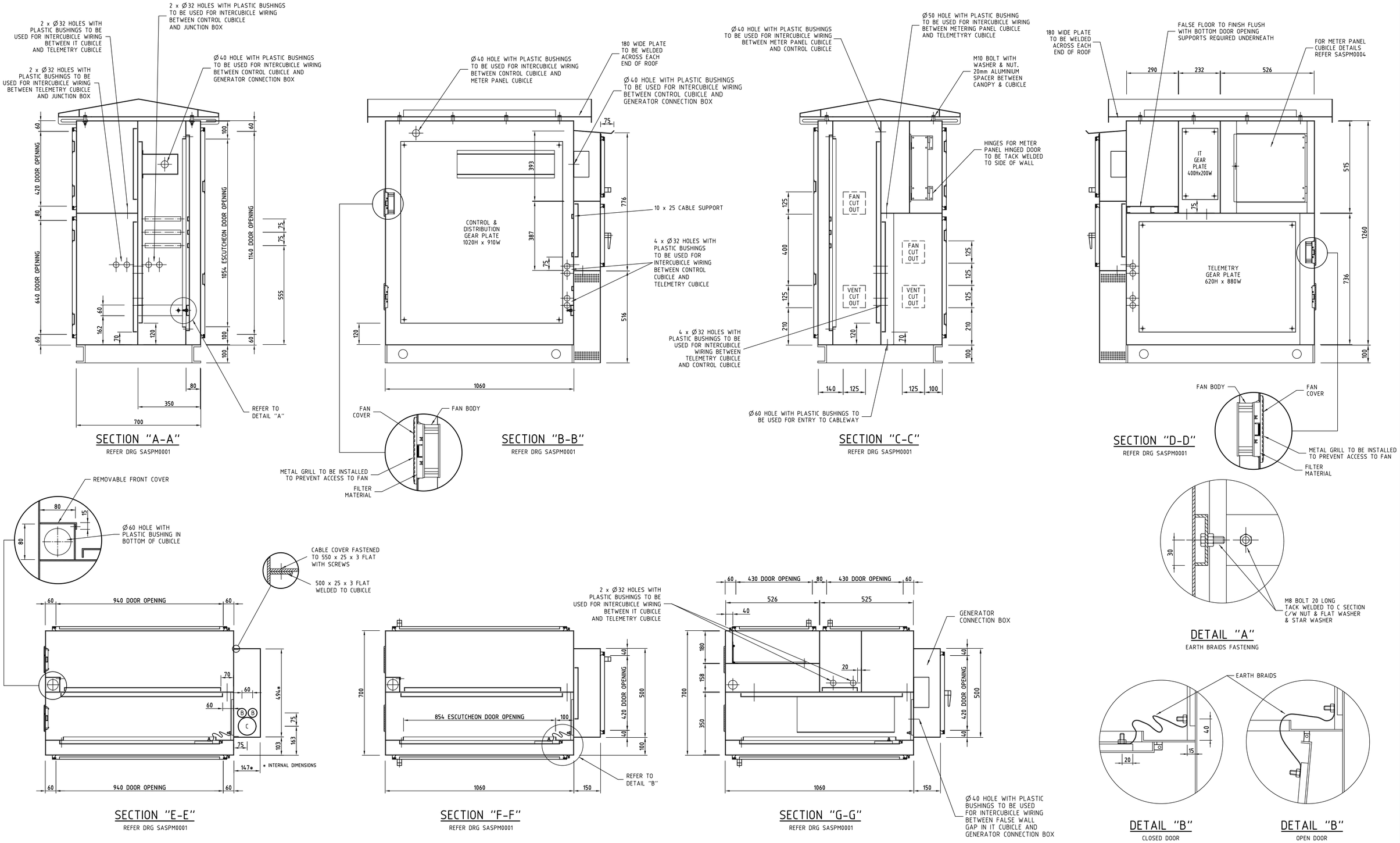

REV NO	DATE	DESIGN REVIEW	REV'D P.MGR	APP'D P.DIR	AMENDMENT
3	24/04/17	SGW/TB	SGW/GB		INITIAL ISSUE TO SGW.
2	09/03/17	SGW/JF	SGW/GB		RESIZED IT GEAR TRAY FOR NEW ETHERNET SWITCH/MODEM DETAILS.
1	18/07/16	SGW/TB	SGW/GB		RESIZED BATTERY COMPT DELETED GLAND PLATES, REV WIRING HOLE SIZES, ADDED FLAT BAR TO PLINTH.
0	30/09/15	SGW/TB	SGW/GB		ISSUED FOR REVIEW

DESIGN CONSULTANT

CLIENT LOGO

South GippslandWater

PROJECT: STANDARD DRAWINGS

LOCATION: SOUTH GIPPSLAND WATER

DRAWN	DRAFTING CHECK	REVIEWED PROJECT MANAGER	APPROVED PROJECT DIRECTOR
OPT/CT	OPT/RJ		
DESIGNED SGW/TB	DESIGN REVIEW SGW/GB		

TITLE: STANDARD SEWERAGE PUMP STATION
PUMP STATION TO 22kW (SOFT STARTER)
BACK TO BACK - PUMP STATION CUBICLE
SECTIONAL ARRANGEMENT - SHEET 1 OF 2

SCALE	DRAWING No	REVISION
NTS	SASPM0002	3

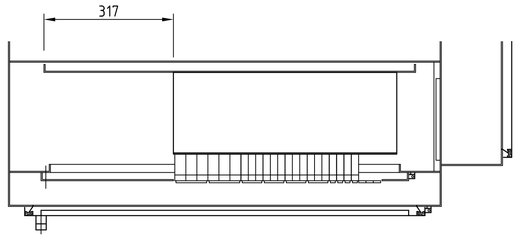

CIRCUIT BREAKERS TOP VIEW

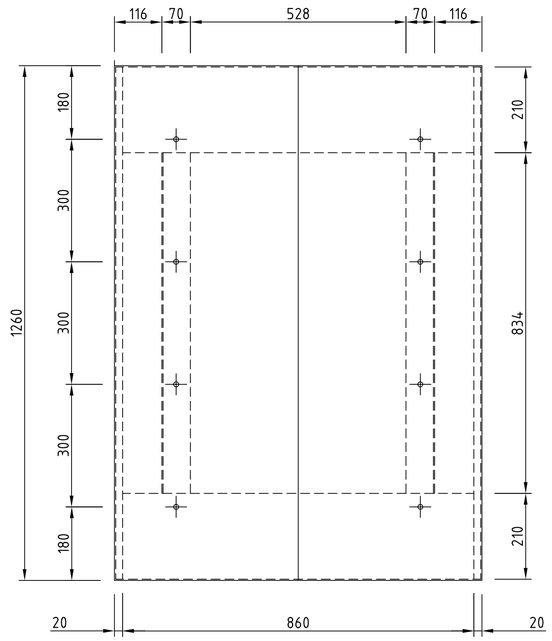

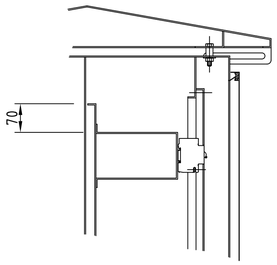

DIN-T CB VIEW

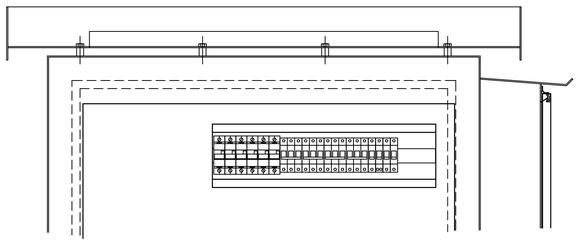

CIRCUIT BREAKERS FRONT VIEW

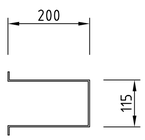

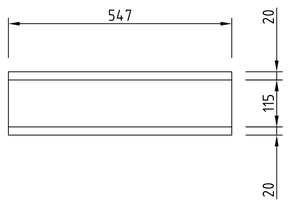

TOP HAT DETAILS

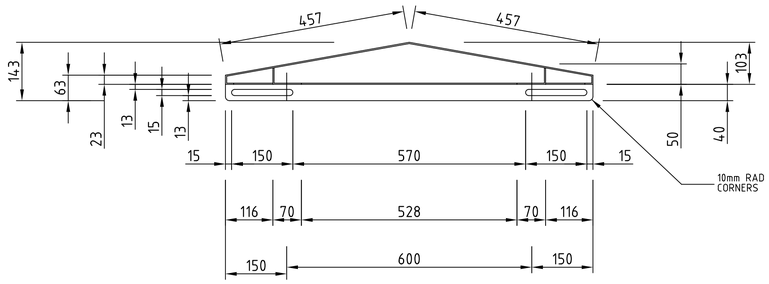

ROOF CANOPY DETAILS

REV NO	DATE	DESIGN REVIEW	REV'D P.MGR	APP'D P.DIR	AMENDMENT
2	24/04/17	SGW/TB	SGW/GB		INITIAL ISSUE TO SGW.
1	18/07/16	SGW/TB	SGW/GB		REMOVED PLINTH DETAILS.
0	30/09/15	SGW/TB	SGW/GB		ISSUED FOR REVIEW

DESIGN CONSULTANT

CLIENT LOGO

South GippslandWater

PROJECT: STANDARD DRAWINGS

LOCATION: SOUTH GIPPSLAND WATER

DRAWN	DRAFTING CHECK	REVIEWED PROJECT MANAGER	APPROVED PROJECT DIRECTOR
OPT/CT	OPT/RJ		
DESIGNED	DESIGN REVIEW		
SGW/TB	SGW/GB		

TITLE: STANDARD SEWERAGE PUMP STATION
PUMP STATION TO 22kW (SOFT STARTER)
BACK TO BACK - PUMP STATION CUBICLE
SECTIONAL ARRANGEMENT - SHEET 2 OF 2

SCALE	DRAWING No	REVISION
NTS	SASPM0003	2

METERING COMPARTMENT DETAILS

SECTIONS SHOWN WITH METERING DOOR AND HINGE ASSEMBLY REMOVED.
CUBICLE IP RATING: IP55
VENTILATION REQUIRMENTS FOR METERING COMPARTMENT:
PRESSED LOUVERS WITH MESH BACKING TO A MINIMUM DEGREE OF PROTECTION OF IP23.

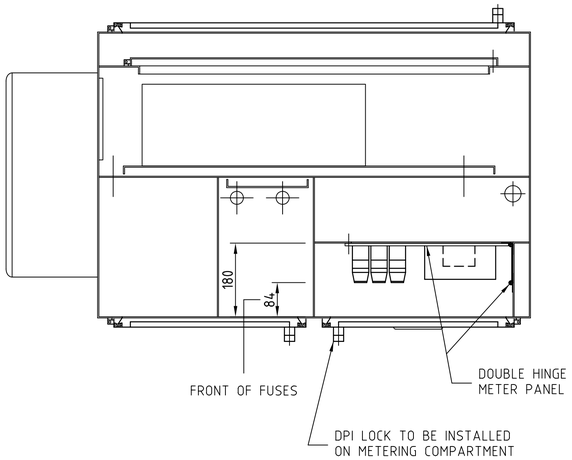

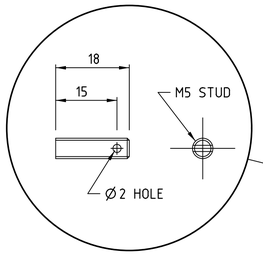

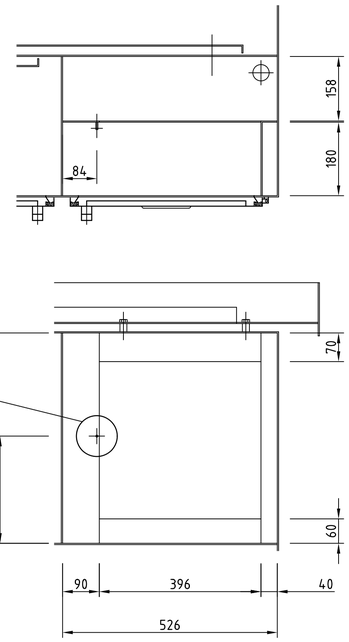

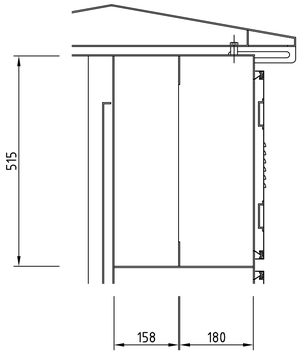

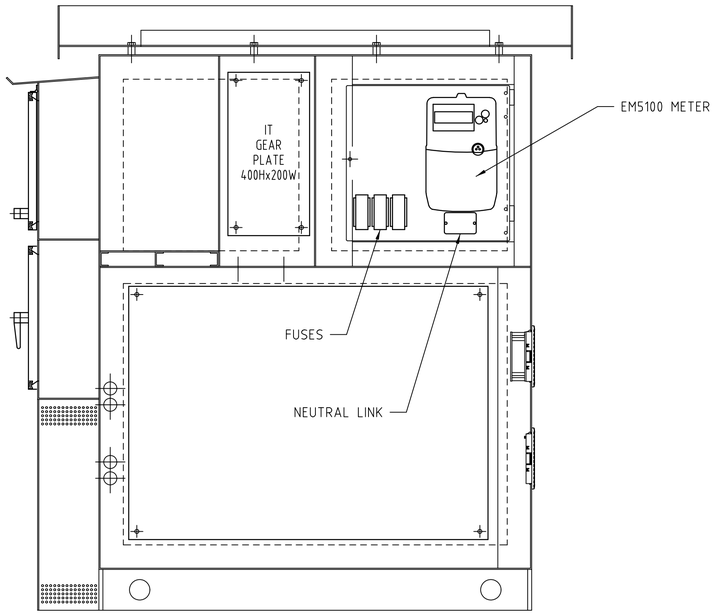

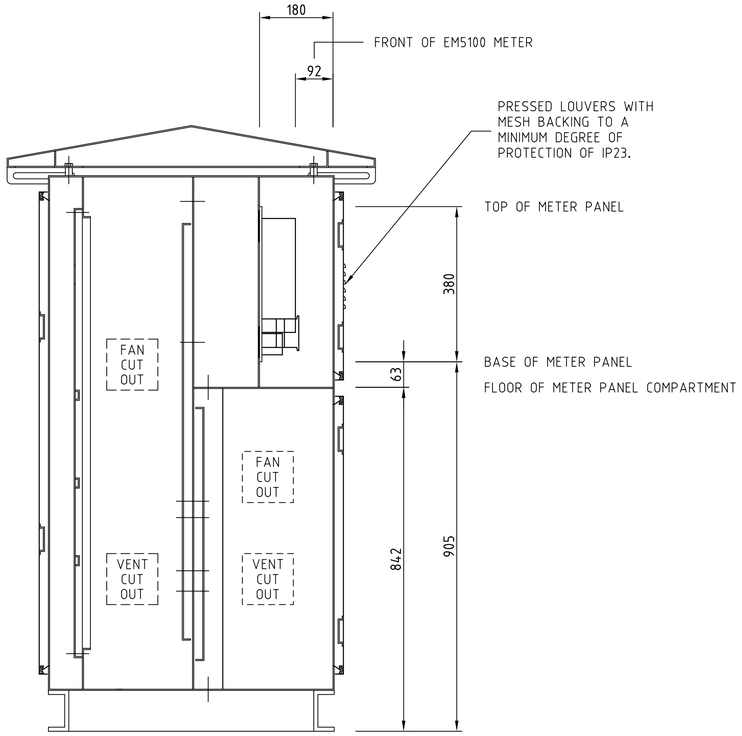

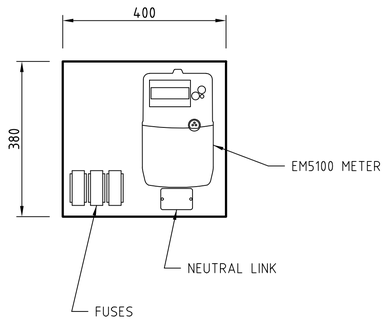

REV NO	DATE	DESIGN REVIEW	REV'D P.MGR	APP'D P.DIR	AMENDMENT
3	24/04/17	SGW/TB	SGW/GB		INITIAL ISSUE TO SGW.
2	09/03/17	SGW/JF	SGW/GB		RESIZED IT GEAR TRAY FOR NEW ETHERNET SWITCH/MODEM DETAILS.
1	18/07/16	SGW/TB	SGW/GB		RESIZED BATTERY COMPARTMENT, ADDED FLAT BAR TO PLINTH ENDS.
0	30/09/15	SGW/TB	SGW/GB		ISSUED FOR REVIEW

DESIGN CONSULTANT

CLIENT LOGO

South GippslandWater

PROJECT: STANDARD DRAWINGS

LOCATION: SOUTH GIPPSLAND WATER

DRAWN	DRAFTING CHECK	REVIEWED PROJECT MANAGER	APPROVED PROJECT DIRECTOR
OPT/CT	OPT/RJ		
DESIGNED	DESIGN REVIEW		
SGW/TB	SGW/GB		

TITLE: STANDARD SEWERAGE PUMP STATION
PUMP STATION TO 22kW (SOFT STARTER)
BACK TO BACK - PUMP STATION CUBICLE
METERING COMPARTMENT DETAILS

SCALE	DRAWING No	REVISION
NTS	SASPM0004	3

CONSTRUCTION NOTES

IP RATING:	CUBICLE TO BE CONSTRUCTED TO IP56 RATING.
MATERIAL:	3.0mm MARINE GRADE ALUMINIUM.
FINISH:	TO BE POWDER COATED COLORBOND WILDERNESS GREEN.
HINGES:	GRADE 316 STAINLESS STEEL HINGES & PINS WITH LOCKING WASHERS UNDER FIXING SCREWS.
HANDLES:	TO BE SUPPLIED BY CLIENT REQUIRE 3 POINT LOCKING SYSTEM WITH ROLLER ENDS TO BE SUPPLIED BY MANUFACTURER ON DOORS. ALL LOCKS ARE SY3.
GEAR PLATES:	CONTROL & DISTRIBUTION GEAR TRAY - 1020mm HIGH x 910mm WIDE TELEMETRY GEAR TRAY - 620mm HIGH x 880mm WIDE IT GEAR TRAY - 400mm HIGH x 200mm WIDE TO BE POWDER COATED WHITE & FRONT OF GEAR TRAY TO BE 25mm FROM WALL.
ESCUTCHEON DOORS:	TO BE POWDER COATED WHITE & HAVE M4 CHROMED, SLOTTED ROUND HEAD THUMB SCREWS WITH RETAINING CLIP (2 PLACES). TO BE FITTED WITH CABLE SUPPORT RAILS MOUNTED BEHIND.
EXTERNAL VENTS:	B & R EXTERNAL VENT KIT IPVK SUPPLIED WITH GASKET, INSERT FILTER & FIXINGS OR EQUIVALENT. VENTS ARE TO BE SEALED WITH TERMITE MESH.
PLINTH:	ALUMINIUM PREFORMED CHANNEL CONSTRUCTED IN ONE CONTINUOUS LENGTH.
DOOR SEALS:	5060 PVC / NITRILE 6mm THICK OR EQUIVALENT.
DOOR STAYS:	ALL EXTERNAL DOORS TO BE FITTED WITH MECHANICALLY LOCKING ROD TYPE DOOR STAYS TO KEEP DOOR OPEV AT A MINIMUM OF 110 DEGREES.
CABLE SUPPORTS:	10 x 25 CABLE SUPPORT RAILS TO BE MOUNTED ON SIDE OF CABINET'S INTERIOR & ESCUTCHEON AS SHOWN.

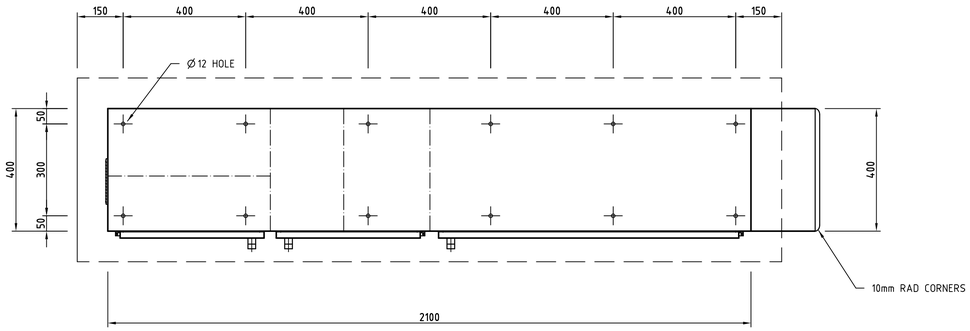

PLAN VIEW

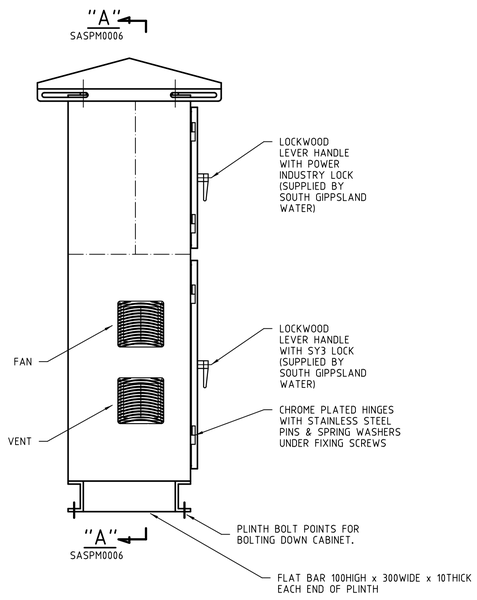

LEFT HAND SIDE ELEVATION

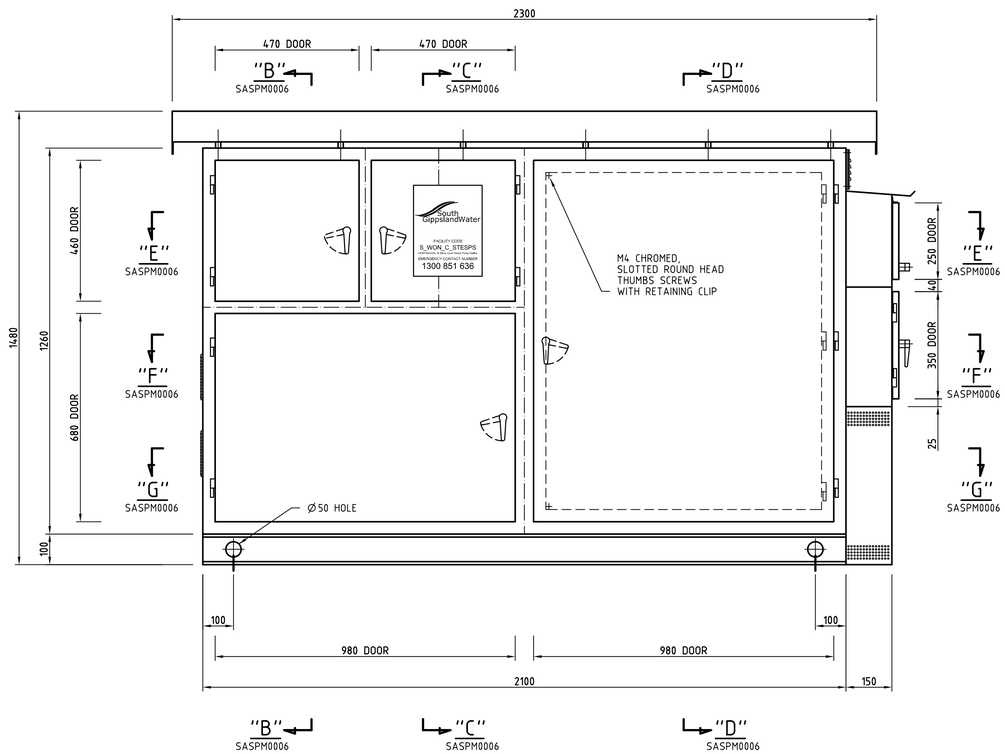

FRONT ELEVATION
(ESCUTCHEON DOORS SHOWN DOTTED)

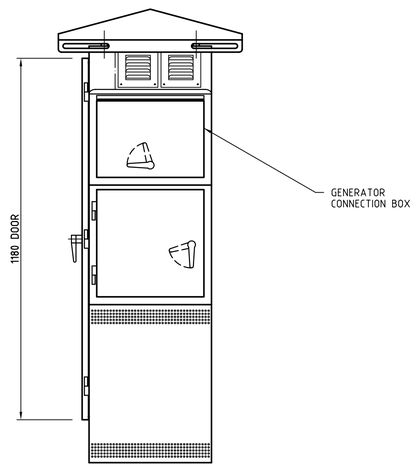

RIGHT HAND SIDE ELEVATION

REV NO	DATE	DESIGN REVIEW	REV'D P.MGR	APP'D P.DIR	AMENDMENT
4	24/04/17	SGW/TB	SGW/GB		INITIAL ISSUE TO SGW.
3	09/03/17	SGW/JF	SGW/GB		RESIZED IT GEAR TRAY FOR NEW ETHERNET SWITCH/MODEM DETAILS.
2	03/08/16	SGW/TB	SGW/GB		ADDED NOTE : VENTS ARE TO BE SEALED WITH TERMITE MESH.
1	18/07/16	SGW/TB	SGW/GB		RESIZED BATTERY COMPARTMENT, ADDED FLAT BAR TO PLINTH ENDS.
0	30/09/15	SGW/TB	SGW/GB		ISSUED FOR REVIEW

DESIGN CONSULTANT

CLIENT LOGO

South GippslandWater

PROJECT: STANDARD DRAWINGS

LOCATION: SOUTH GIPPSLAND WATER

DRAWN	DRAFTING CHECK	REVIEWED PROJECT MANAGER	APPROVED PROJECT DIRECTOR
OPT/CT	OPT/RJ		
DESIGNED	DESIGN REVIEW		
SGW/TB	SGW/GB		

TITLE: STANDARD SEWERAGE PUMP STATION
PUMP STATION TO 22kW (SOFT STARTER)
SIDE BY SIDE - PUMP STATION CUBICLE - J/B RHS
GENERAL ARRANGEMENT

SCALE	DRAWING No.	REVISION
NTS	SASPM0005	4

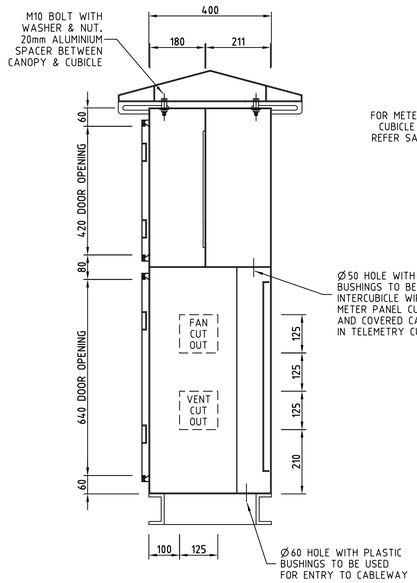

SECTION "B-B"

REFER DRG SASPM0005

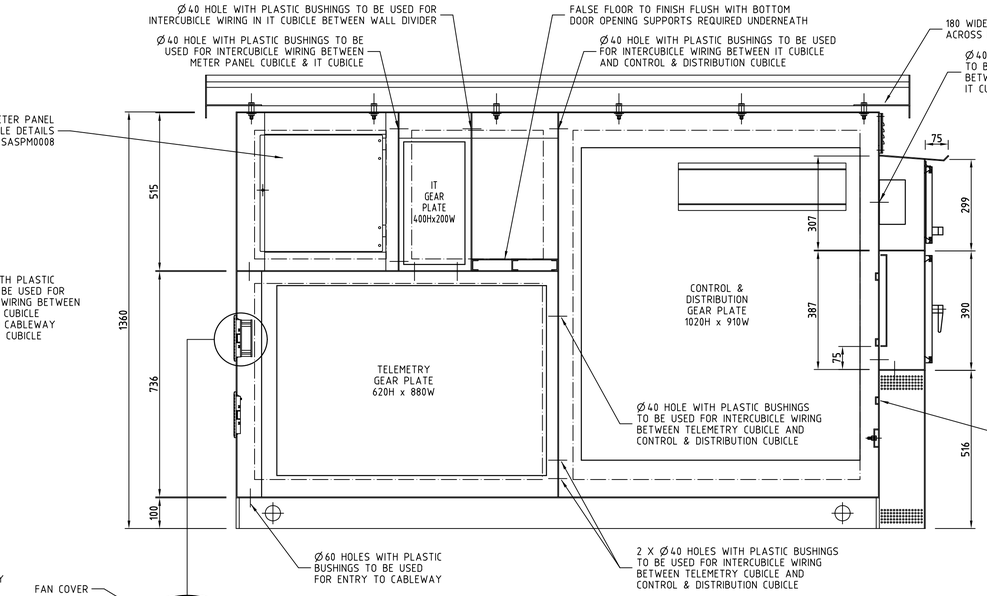

SECTION "A-A"

REFER DRG SASPM0005

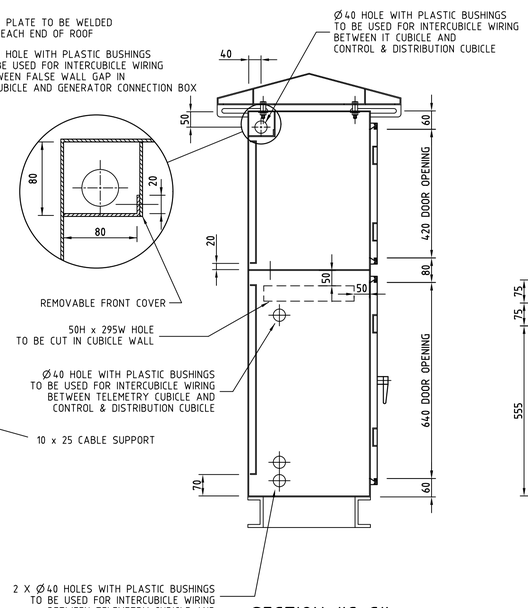

SECTION "C-C"

REFER DRG SASPM0005

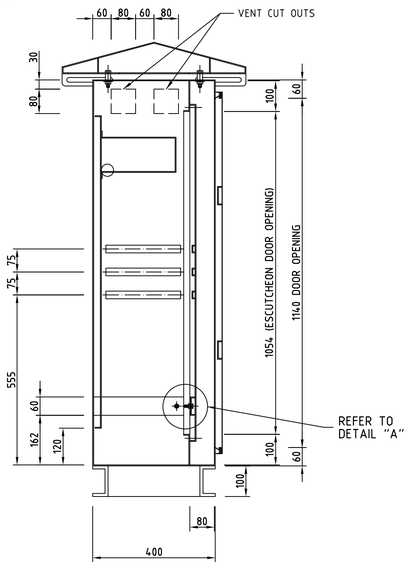

SECTION "D-D"

REFER DRG SASPM0005

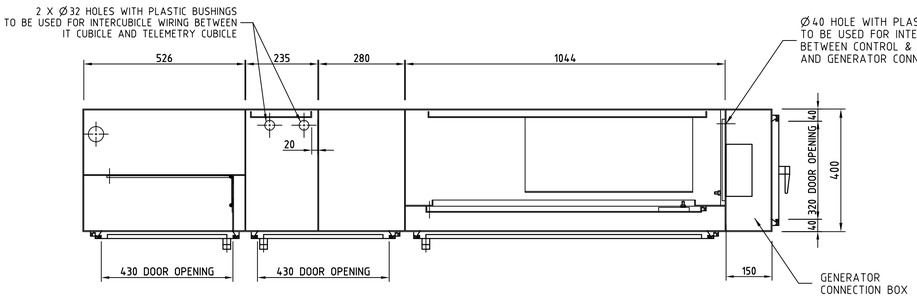

SECTION "E-E"

REFER DRG SASPM0005

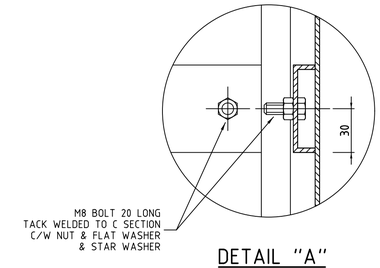

DETAIL "A"

EARTH BRAIDS FASTENING

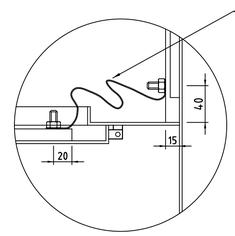

DETAIL "B"

CLOSED DOOR

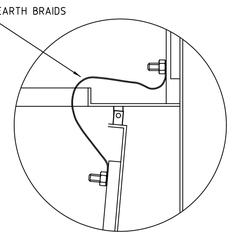

DETAIL "B"

OPEN DOOR

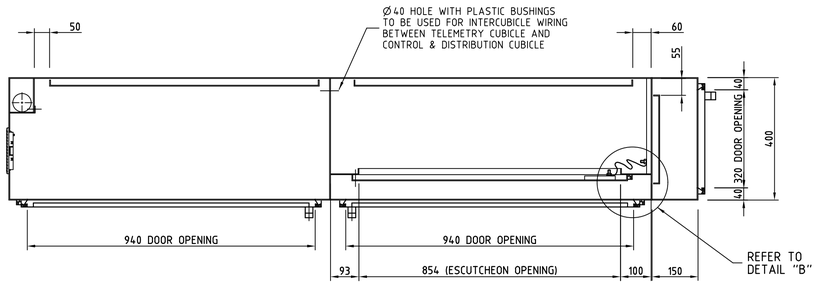

SECTION "F-F"

REFER DRG SASPM0005

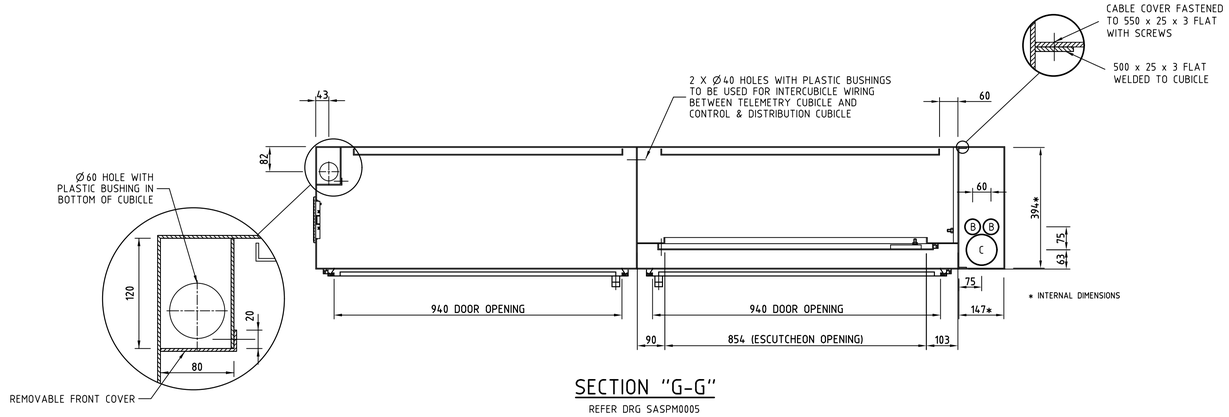

SECTION "G-G"

REFER DRG SASPM0005

REV NO	DATE	DESIGN REVIEW	REV'D P.MGR	APP'D P.DIR	AMENDMENT
1	24/04/17	SGW/TB	SGW/GB		INITIAL ISSUE TO SGW.
2	09/03/17	SGW/JF	SGW/GB		RESIZED IT GEAR TRAY FOR NEW ETHERNET SWITCH/MODEM DETAILS.
1	18/07/16	SGW/TB	SGW/GB		RESIZED BATTERY COMPT DELETED GLAND PLATES, REV WIRING HOLE SIZES, ADDED FLAT BAR TO PLINTH.
0	30/09/15	SGW/TB	SGW/GB		ISSUED FOR REVIEW

DESIGN CONSULTANT

CLIENT LOGO

South GippslandWater

PROJECT: STANDARD DRAWINGS

LOCATION: SOUTH GIPPSLAND WATER

DRAWN	DRAFTING CHECK	REVIEWED PROJECT MANAGER	APPROVED PROJECT DIRECTOR
OPT/CT	OPT/RJ		
DESIGNED SGW/TB	DESIGN REVIEW SGW/GB		

TITLE

STANDARD SEWERAGE PUMP STATION

PUMP STATION TO 22kW (SOFT STARTER)

SIDE BY SIDE - PUMP STATION CUBICLE - J/B RHS

SECTIONAL ARRANGEMENT - SHEET 1 OF 2

SCALE	DRAWING No	REVISION
NTS	SASPM0006	3

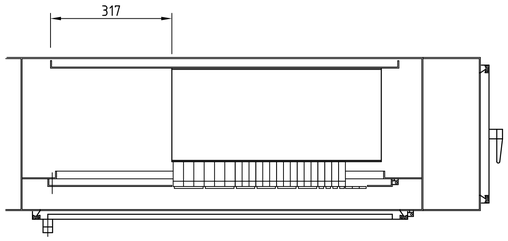

CIRCUIT BREAKERS TOP VIEW

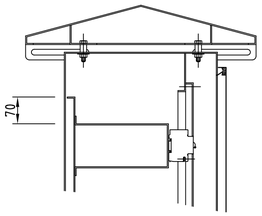

DIN-T CB VIEW

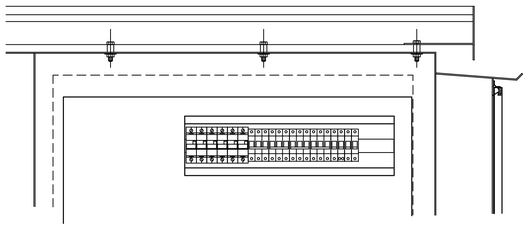

CIRCUIT BREAKERS FRONT VIEW

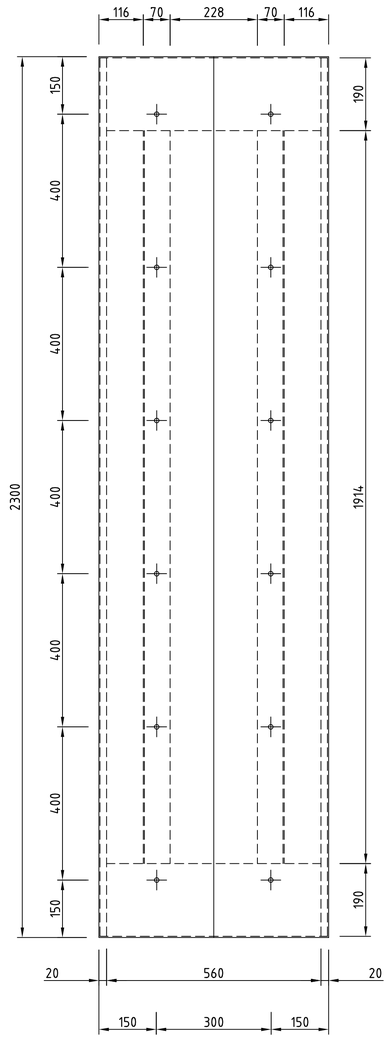

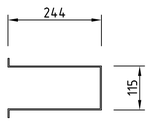

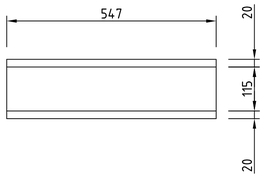

TOP HAT DETAILS

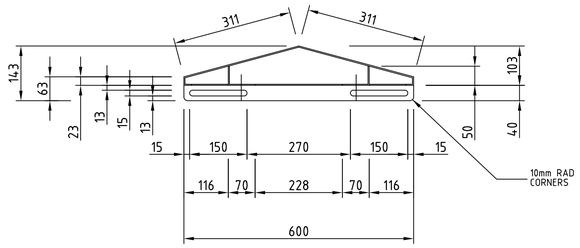

ROOF CANOPY DETAILS

REV NO	DATE	DESIGN REVIEW	REV'D P.MGR	APP'D P.DIR	AMENDMENT
2	24/04/17	SGW/TB	SGW/GB		INITIAL ISSUE TO SGW.
1	18/07/16	SGW/TB	SGW/GB		REMOVED PLINTH DETAILS.
0	30/09/15	SGW/TB	SGW/GB		ISSUED FOR REVIEW

DESIGN CONSULTANT

CLIENT LOGO

South GippslandWater

PROJECT: STANDARD DRAWINGS

LOCATION: SOUTH GIPPSLAND WATER

DRAWN	DRAFTING CHECK	REVIEWED PROJECT MANAGER	APPROVED PROJECT DIRECTOR
OPT/CT	OPT/RJ		
DESIGNED	DESIGN REVIEW		
SGW/TB	SGW/GB		

TITLE: STANDARD SEWERAGE PUMP STATION
PUMP STATION TO 22kW (SOFT STARTER)
SIDE BY SIDE - PUMP STATION CUBICLE - J/B RHS
SECTIONAL ARRANGEMENT - SHEET 2 OF 2

SCALE	DRAWING No	REVISION
NTS	SASPM0007	2

METERING COMPARTMENT DETAILS

SECTIONS SHOWN WITH METERING DOOR AND HINGE ASSEMBLY REMOVED.
CUBICLE IP RATING: IP55
VENTILATION REQUIRMENTS FOR METERING COMPARTMENT:
PRESSED LOUVERS WITH MESH BACKING TO A MINIMUM DEGREE OF PROTECTION OF IP23.

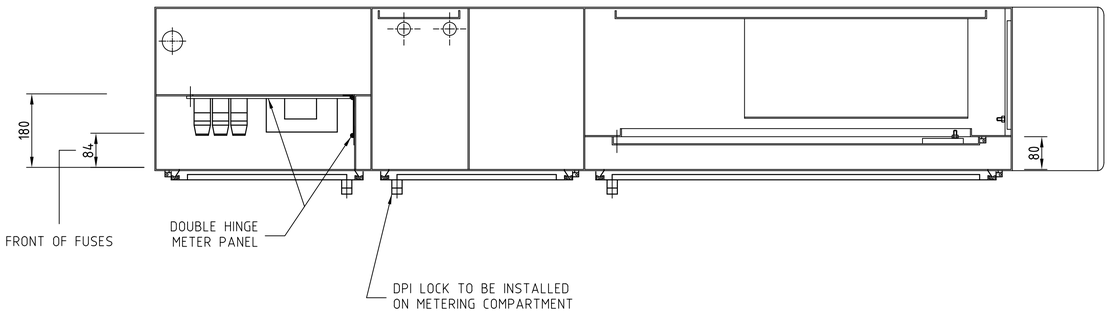

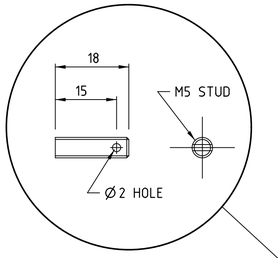

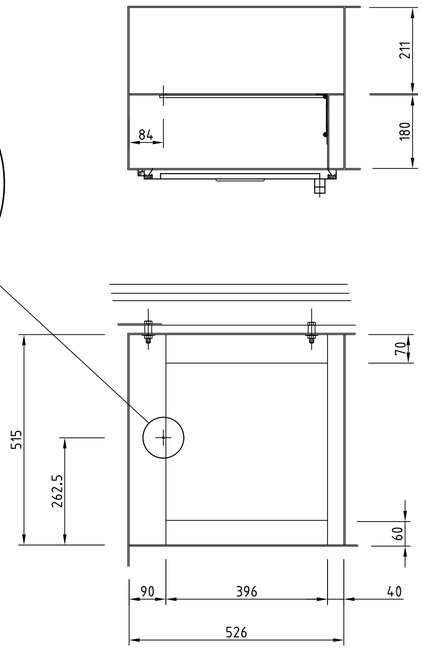

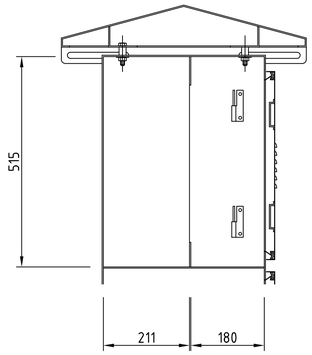

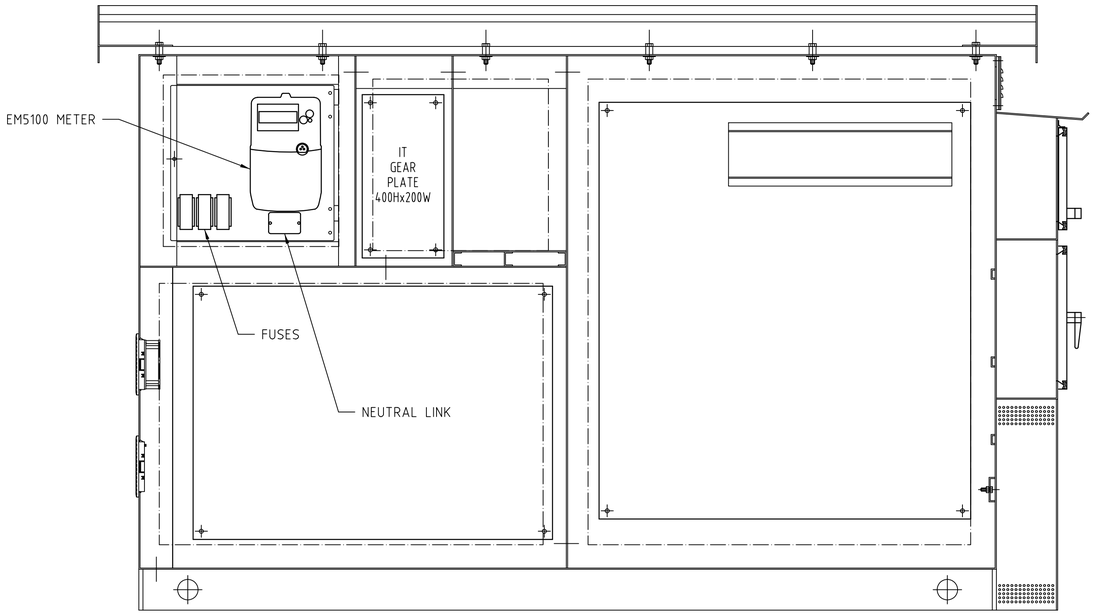

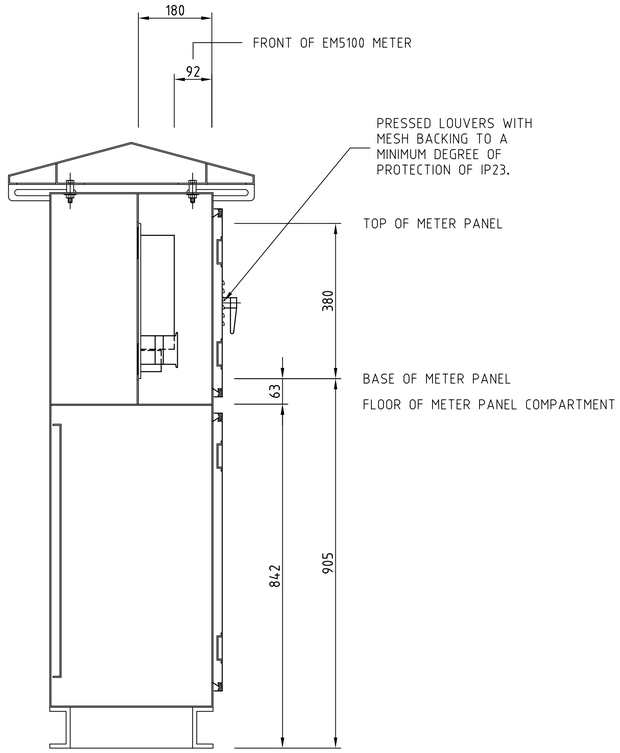

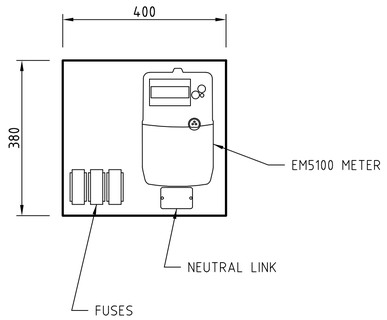

REV NO	DATE	DESIGN REVIEW	REV'D P.MGR	APP'D P.DIR	AMENDMENT
1	24/04/17	SGW/TB	SGW/GB		INITIAL ISSUE TO SGW.
2	09/03/17	SGW/JF	SGW/GB		RESIZED IT GEAR TRAY FOR NEW ETHERNET SWITCH/MODEM DETAILS.
1	18/07/16	SGW/TB	SGW/GB		RESIZED BATTERY COMPARTMENT ADDED FLAT BAR TO PLINTH ENDS.
0	30/09/15	SGW/TB	SGW/GB		ISSUED FOR REVIEW

DESIGN CONSULTANT

CLIENT LOGO

South GippslandWater

PROJECT STANDARD DRAWINGS

LOCATION SOUTH GIPPSLAND WATER

DRAWN	DRAFTING CHECK	REVIEWED PROJECT MANAGER	APPROVED PROJECT DIRECTOR
OPT/CT	OPT/RJ		
DESIGNED SGW/TB	DESIGN REVIEW SGW/GB		

TITLE
STANDARD SEWERAGE PUMP STATION
PUMP STATION TO 22kW (SOFT STARTER)
SIDE BY SIDE - PUMP STATION CUBICLE - J/B RHS
METERING COMPARTMENT DETAILS

SCALE	DRAWING No	REVISION
NTS	SASPM0008	3

CONSTRUCTION NOTES

IP RATING:	CUBICLE TO BE CONSTRUCTED TO IP56 RATING.
MATERIAL:	3.0mm MARINE GRADE ALUMINIUM.
FINISH:	TO BE POWDER COATED COLORBOND WILDERNESS GREEN.
HINGES:	GRADE 316 STAINLESS STEEL HINGES & PINS WITH LOCKING WASHERS UNDER FIXING SCREWS.
HANDLES:	TO BE SUPPLIED BY CLIENT REQUIRE 3 POINT LOCKING SYSTEM WITH ROLLER ENDS TO BE SUPPLIED BY MANUFACTURER ON DOORS. ALL LOCKS ARE SY3.
GEAR PLATES:	CONTROL & DISTRIBUTION GEAR TRAY - 1020mm HIGH x 910mm WIDE TELEMETRY GEAR TRAY - 620mm HIGH x 880mm WIDE IT GEAR TRAY - 400mm HIGH x 200mm WIDE TO BE POWDER COATED WHITE & FRONT OF GEAR TRAY TO BE 25mm FROM WALL.
ESCUTCHEON DOORS:	TO BE POWDER COATED WHITE & HAVE M4 CHROMED, SLOTTED ROUND HEAD THUMB SCREWS WITH RETAINING CLIP (2 PLACES). TO BE FITTED WITH CABLE SUPPORT RAILS MOUNTED BEHIND.
EXTERNAL VENTS:	B & R EXTERNAL VENT KIT IPVK SUPPLIED WITH GASKET, INSERT FILTER & FIXINGS OR EQUIVALENT. VENTS ARE TO BE SEALED WITH TERMITE MESH.
PLINTH:	ALUMINIUM PREFORMED CHANNEL CONSTRUCTED IN ONE CONTINUOUS LENGTH.
DOOR SEALS:	5060 PVC / NITRILE 6mm THICK OR EQUIVALENT.
DOOR STAYS:	ALL EXTERNAL DOORS TO BE FITTED WITH MECHANICALLY LOCKING ROD TYPE DOOR STAYS TO KEEP DOOR OPEV AT A MINIMUM OF 110 DEGREES.
CABLE SUPPORTS:	10 x 25 CABLE SUPPORT RAILS TO BE MOUNTED ON SIDE OF CABINET'S INTERIOR & ESCUTCHEON AS SHOWN.

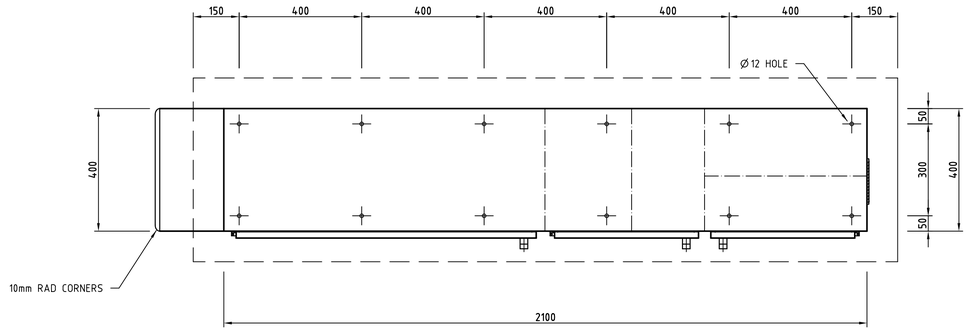

PLAN VIEW

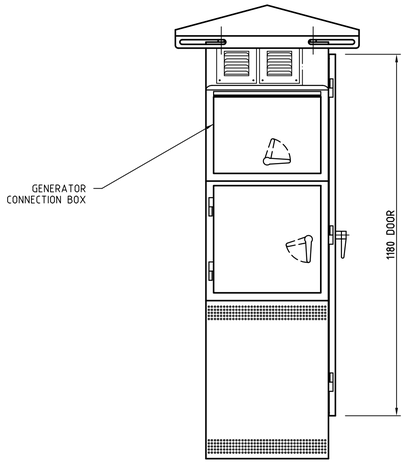

LEFT HAND SIDE ELEVATION

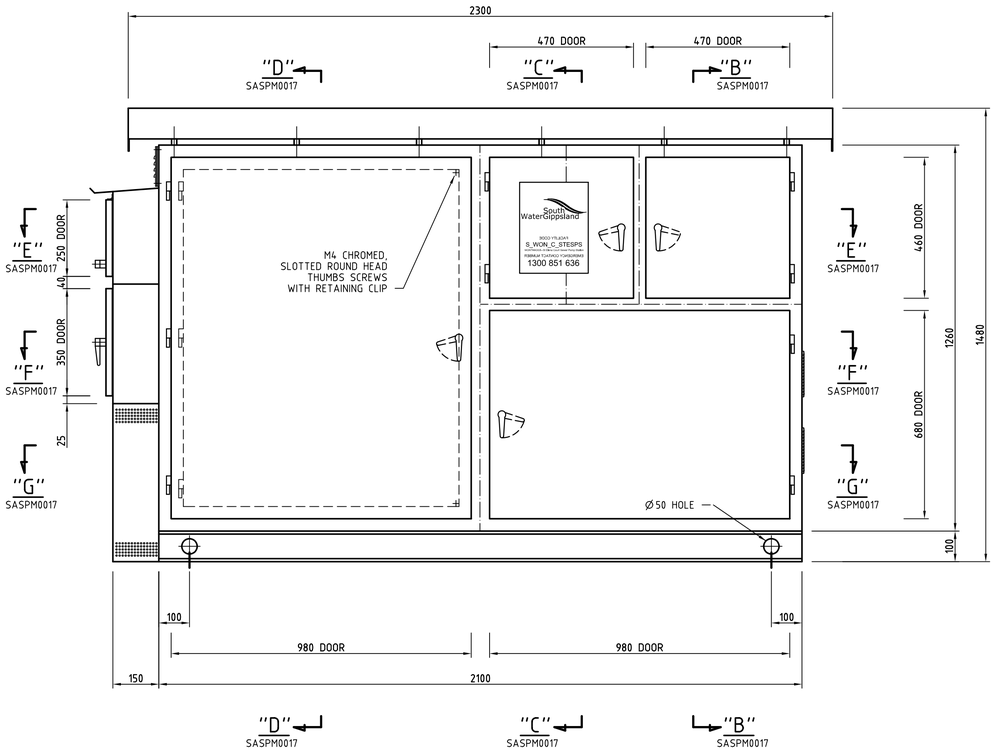

FRONT ELEVATION
(ESCUTCHEON DOORS SHOWN DOTTED)

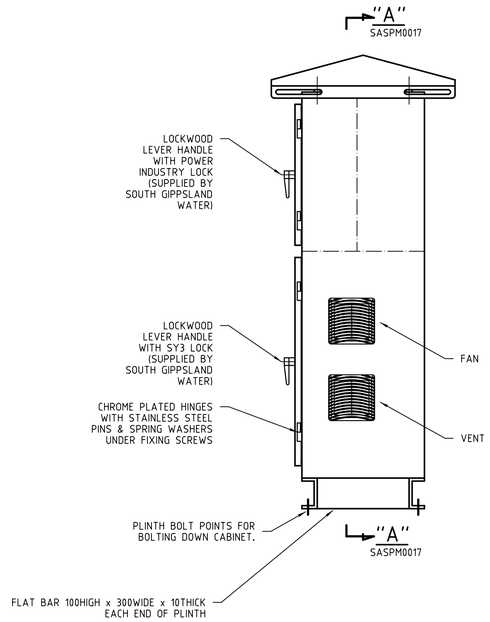

RIGHT HAND SIDE ELEVATION

REV NO	DATE	DESIGN REVIEW	REV'D P.MGR	APP'D P.DIR	AMENDMENT
4	24/04/17	SGW/TB	SGW/GB		INITIAL ISSUE TO SGW.
3	09/03/17	SGW/JF	SGW/GB		RESIZED IT GEAR TRAY FOR NEW ETHERNET SWITCH/MODEM DETAILS.
2	03/08/16	SGW/TB	SGW/GB		ADDED NOTE : VENTS ARE TO BE SEALED WITH TERMITE MESH.
1	18/07/16	SGW/TB	SGW/GB		RESIZED BATTERY COMPARTMENT, ADDED FLAT BAR TO PLINTH ENDS.
0	25/05/16	SGW/TB	SGW/GB		ISSUED FOR REVIEW

DESIGN CONSULTANT

CLIENT LOGO: South GippslandWater

PROJECT: STANDARD DRAWINGS

LOCATION: SOUTH GIPPSLAND WATER

DRAWN	DRAFTING CHECK	REVIEWED PROJECT MANAGER	APPROVED PROJECT DIRECTOR
OPT/CT	OPT/RJ		
DESIGNED	DESIGN REVIEW		
SGW/TB	SGW/GB		

TITLE: STANDARD SEWERAGE PUMP STATION
PUMP STATION TO 22kW (SOFT STARTER)
SIDE BY SIDE - PUMP STATION CUBICLE - J/B LHS
GENERAL ARRANGEMENT

SCALE	DRAWING No	REVISION
NTS	SASPM0016	4

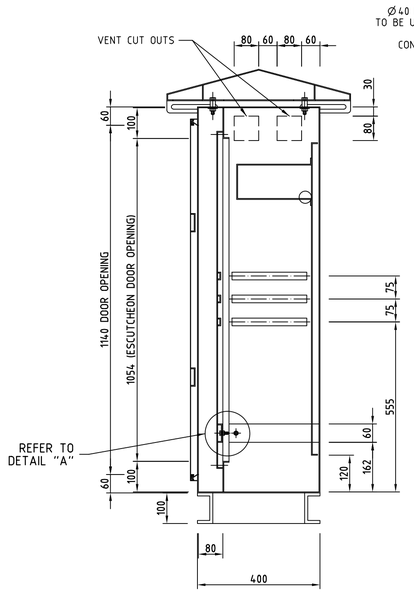

SECTION "D-D"

REFER DRG SASPM0016

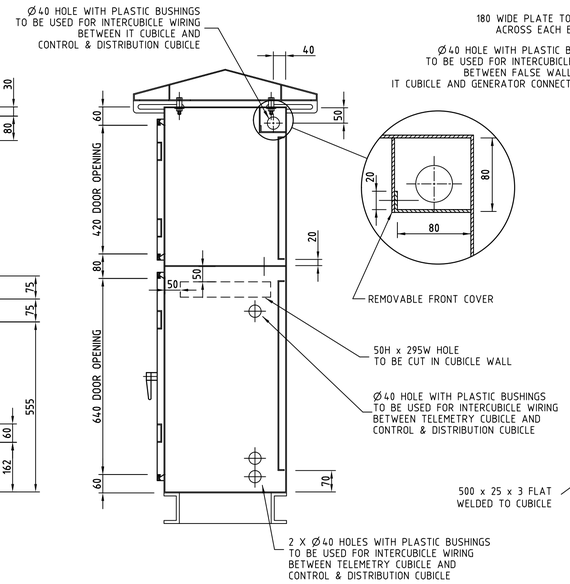

SECTION "C-C"

REFER DRG SASPM0016

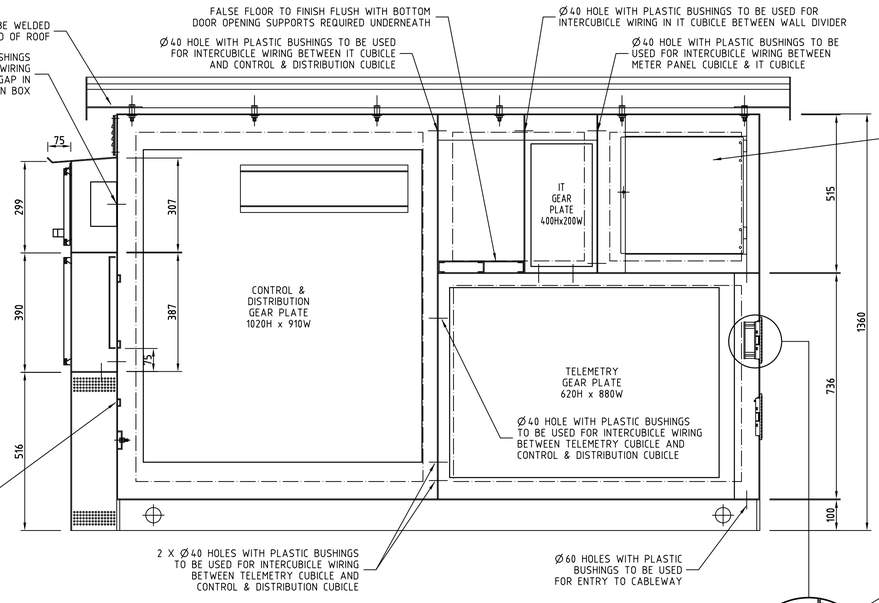

SECTION "A-A"

REFER DRG SASPM0016

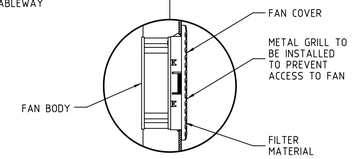

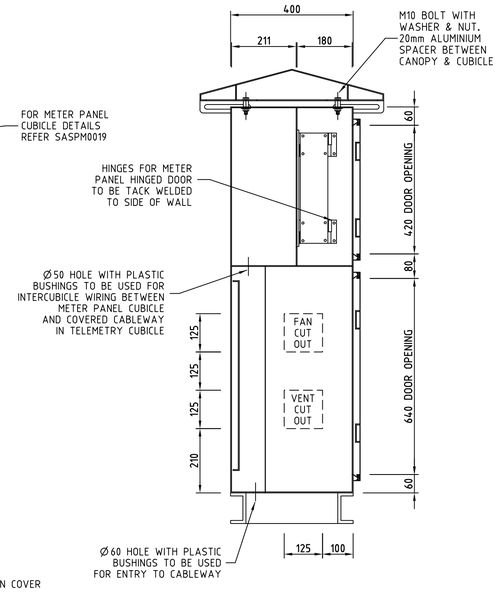

SECTION "B-B"

REFER DRG SASPM0016

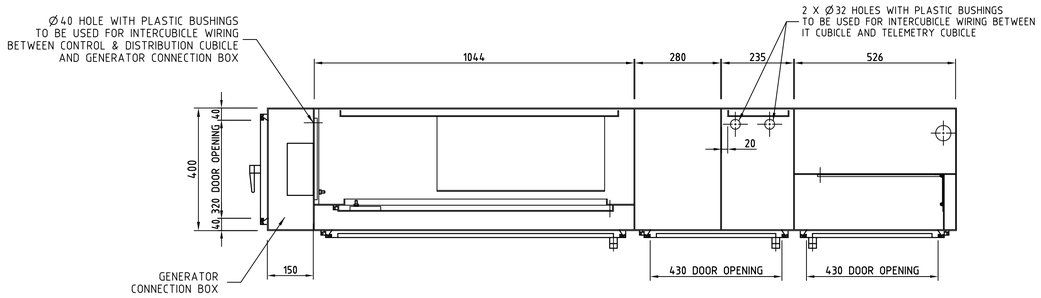

SECTION "E-E"

REFER DRG SASPM0016

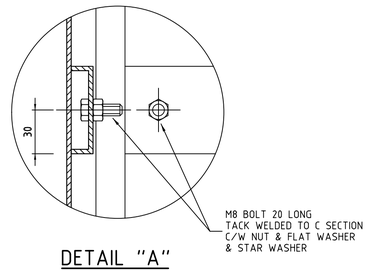

DETAIL "A"

EARTH BRAIDS FASTENING

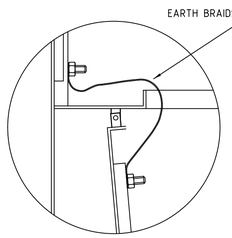

DETAIL "B"

OPEN DOOR

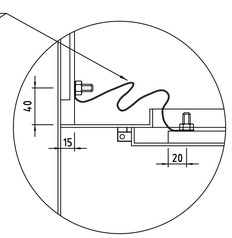

DETAIL "B"

CLOSED DOOR

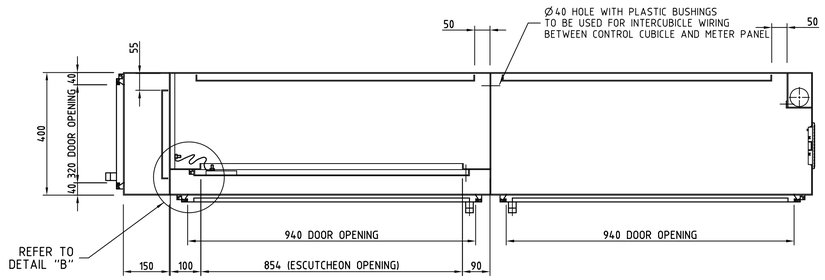

SECTION "F-F"

REFER DRG SASPM0016

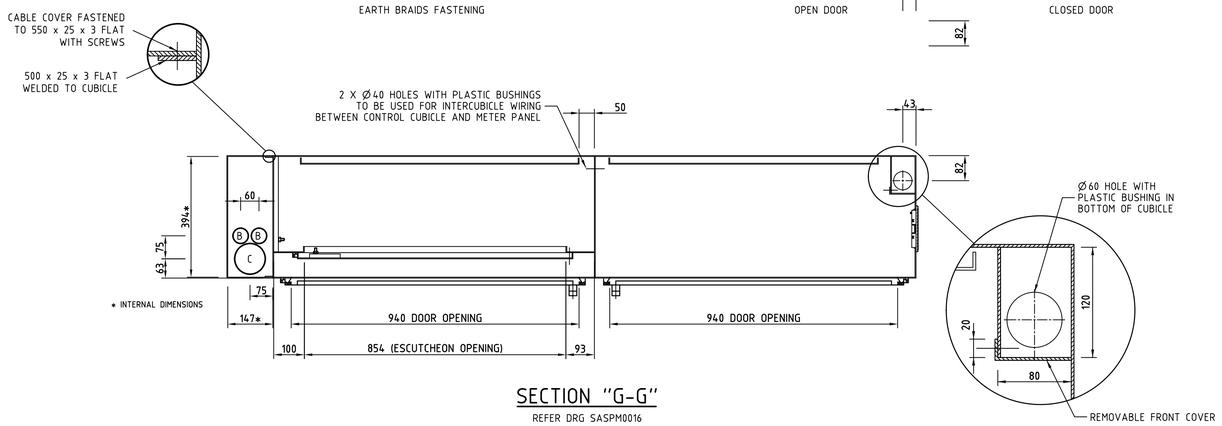

SECTION "G-G"

REFER DRG SASPM0016

REV NO	DATE	DESIGN REVIEW	REV'D P.MGR	APP'D P.DIR	AMENDMENT
3	24/04/17	SGW/TB	SGW/GB		INITIAL ISSUE TO SGW.
2	09/03/17	SGW/JF	SGW/GB		RESIZED IT GEAR TRAY FOR NEW ETHERNET SWITCH/MODEM DETAILS.
1	18/07/16	SGW/TB	SGW/GB		RESIZED BATTERY COMPT DELETED GLAND PLATES, REV WIRING HOLE SIZES, ADDED FLAT BAR TO PLINTH.
0	25/05/16	SGW/TB	SGW/GB		ISSUED FOR REVIEW

DESIGN CONSULTANT

CLIENT LOGO

South GippslandWater

PROJECT: STANDARD DRAWINGS

LOCATION: SOUTH GIPPSLAND WATER

DRAWN	DRAFTING CHECK	REVIEWED PROJECT MANAGER	APPROVED PROJECT DIRECTOR
OPT/CT	OPT/RJ		
DESIGNED	DESIGN REVIEW		
SGW/TB	SGW/GB		

TITLE

STANDARD SEWERAGE PUMP STATION

PUMP STATION TO 22kW (SOFT STARTER)

SIDE BY SIDE - PUMP STATION CUBICLE - J/B LHS

SECTIONAL ARRANGEMENT - SHEET 1 OF 2

SCALE	DRAWING No.	REVISION
NTS	SASPM0017	3

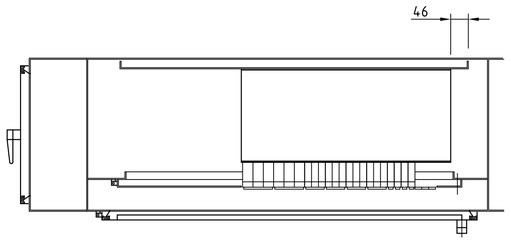

CIRCUIT BREAKERS TOP VIEW

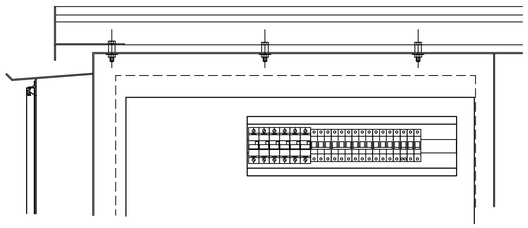

CIRCUIT BREAKERS FRONT VIEW

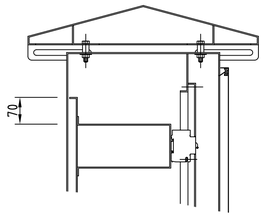

DIN-T CB VIEW

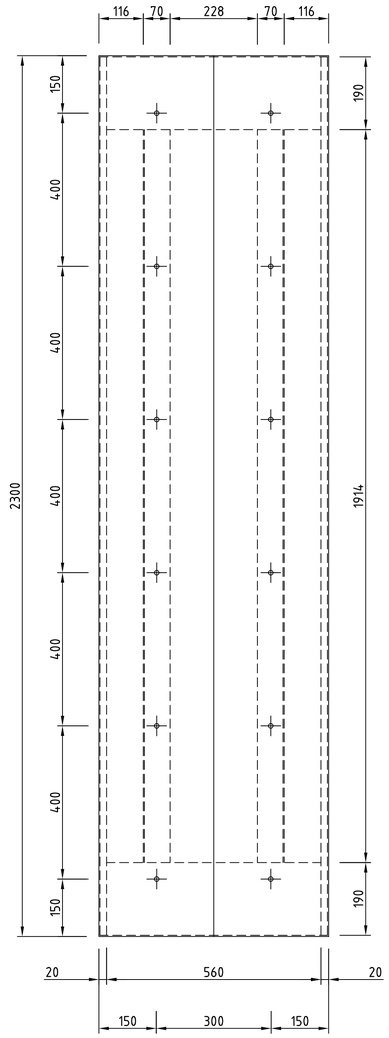

TOP HAT DETAILS

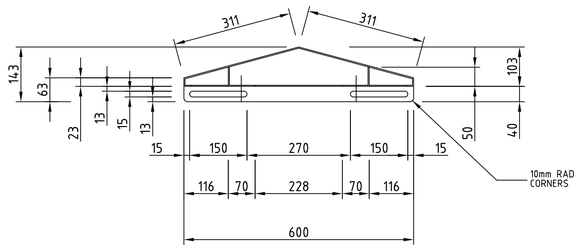

ROOF CANOPY DETAILS

REV NO	DATE	DESIGN REVIEW	REV'D P.MGR	APP'D P.DIR	AMENDMENT
2	24/04/17	SGW/TB	SGW/GB		INITIAL ISSUE TO SGW.
1	18/07/16	SGW/TB	SGW/GB		REMOVED PLINTH DETAILS.
0	25/05/16	SGW/TB	SGW/GB		ISSUED FOR REVIEW

DESIGN CONSULTANT

CLIENT LOGO

South GippslandWater

PROJECT: STANDARD DRAWINGS

LOCATION: SOUTH GIPPSLAND WATER

DRAWN	DRAFTING CHECK	REVIEWED PROJECT MANAGER	APPROVED PROJECT DIRECTOR
OPT/CT	OPT/RJ		
DESIGNED	DESIGN REVIEW		
SGW/TB	SGW/GB		

TITLE

STANDARD SEWERAGE PUMP STATION
PUMP STATION TO 22kW (SOFT STARTER)
SIDE BY SIDE - PUMP STATION CUBICLE - J/B LHS
SECTIONAL ARRANGEMENT - SHEET 2 OF 2

SCALE	DRAWING No	REVISION
NTS	SASPM0018	2

METERING COMPARTMENT DETAILS

SECTIONS SHOWN WITH METERING DOOR AND HINGE ASSEMBLY REMOVED.
CUBICLE IP RATING: IP55
VENTILATION REQUIRMENTS FOR METERING COMPARTMENT:
PRESSED LOUVERS WITH MESH BACKING TO A MINIMUM DEGREE OF PROTECTION OF IP23.

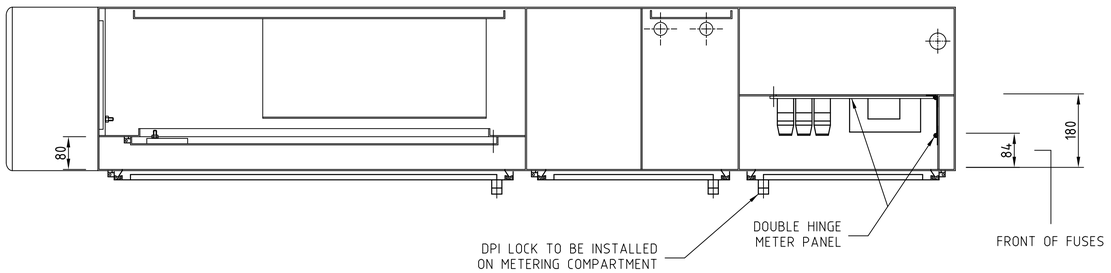

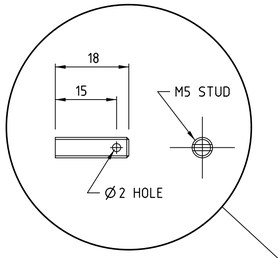

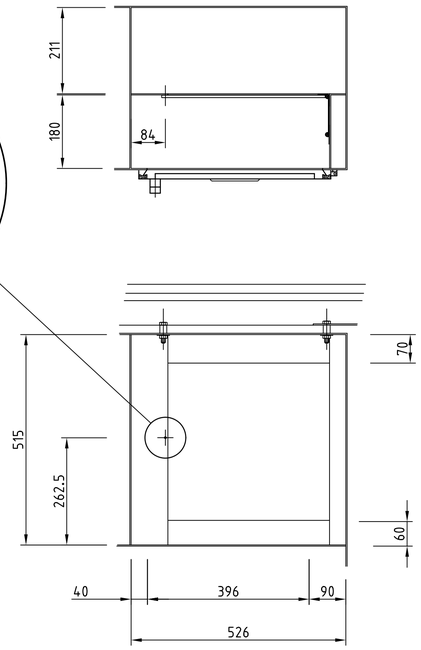

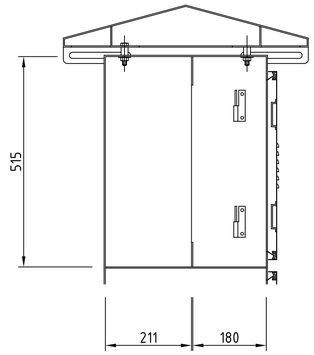

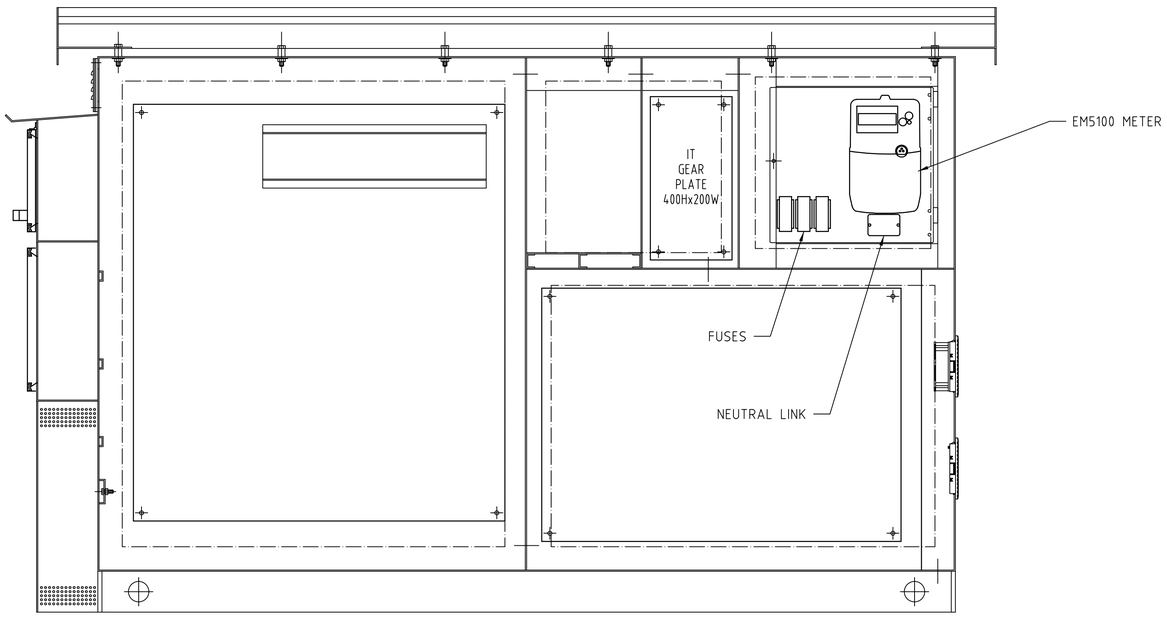

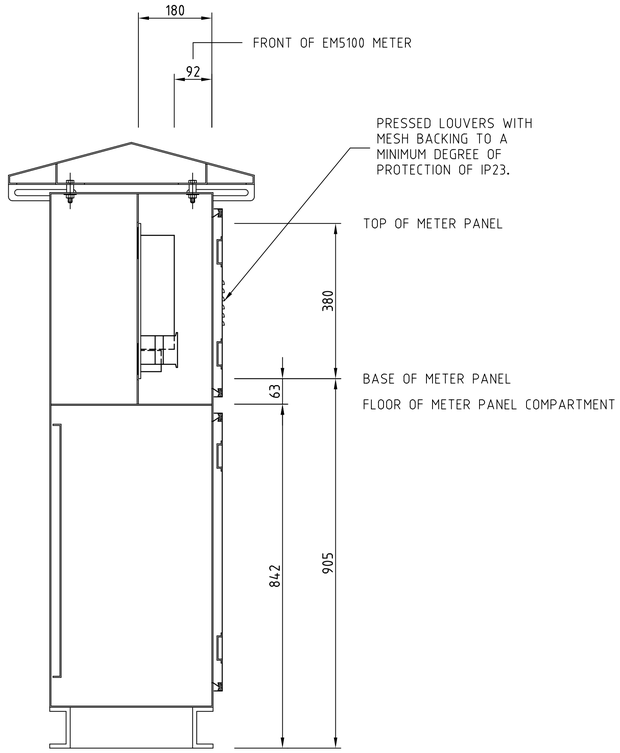

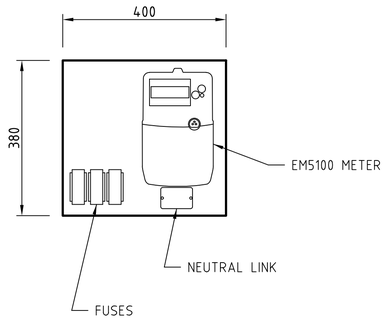

REV NO	DATE	DESIGN REVIEW	REV'D P.MGR	APP'D P.DIR	AMENDMENT
3	24/04/17	SGW/TB	SGW/GB		INITIAL ISSUE TO SGW.
2	09/03/17	SGW/JF	SGW/GB		RESIZED IT GEAR TRAY FOR NEW ETHERNET SWITCH/MODEM DETAILS.
1	18/07/16	SGW/TB	SGW/GB		RESIZED BATTERY COMPARTMENT ADDED FLAT BAR TO PLINTH ENDS.
0	25/05/16	SGW/TB	SGW/GB		ISSUED FOR REVIEW

DESIGN CONSULTANT

CLIENT LOGO

South GippslandWater

PROJECT: STANDARD DRAWINGS

LOCATION: SOUTH GIPPSLAND WATER

DRAWN	DRAFTING CHECK	REVIEWED PROJECT MANAGER	APPROVED PROJECT DIRECTOR
OPT/CT	OPT/RJ		
DESIGNED	DESIGN REVIEW		
SGW/TB	SGW/GB		

TITLE: STANDARD SEWERAGE PUMP STATION
PUMP STATION TO 22kW (SOFT STARTER)
SIDE BY SIDE - PUMP STATION CUBICLE - J/B LHS
METERING COMPARTMENT DETAILS

SCALE	DRAWING No	REVISION
NTS	SASPM0019	3

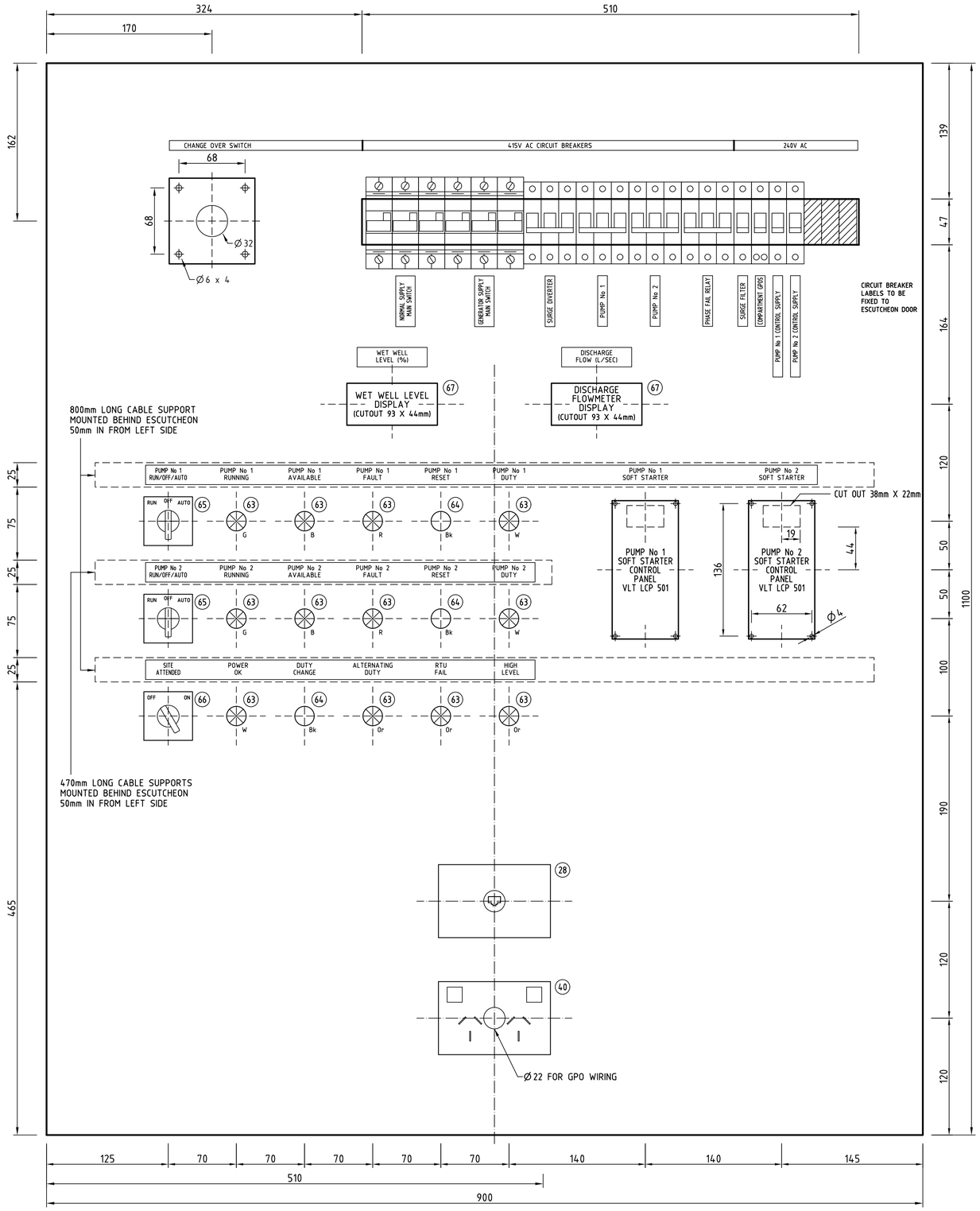

NOT TO SCALE

REV NO	DATE	DESIGN REVIEW	REV'D P.MGR	APP'D P.DIR	AMENDMENT
2	24/04/17	SGW/TB	SGW/GB		INITIAL ISSUE TO SGW.
1	01/03/17	SGW/TB	SGW/GB		RELOCATED SELECTOR SWs, LIGHTS & SOFT STARTER PANELS 50mm RIGHT .
0	30/09/15	SGW/TB	SGW/GB		ISSUED FOR REVIEW

DESIGN CONSULTANT

CLIENT LOGO

South GippslandWater

PROJECT: STANDARD DRAWINGS

LOCATION: SOUTH GIPPSLAND WATER

DRAWN	DRAFTING CHECK	REVIEWED PROJECT MANAGER	APPROVED PROJECT DIRECTOR
OPT/CT	OPT/RJ		
DESIGNED	DESIGN REVIEW		
SGW/TB	SGW/GB		

TITLE: STANDARD SEWERAGE PUMP STATION
PUMP STATION TO 22kW (SOFT STARTER)
CONTROL & DISTRIBUTION COMPARTMENT (EC004)
ESCUTCHEON DOOR LAYOUT

SCALE	DRAWING No	REVISION
NTS	SASPM0009	2

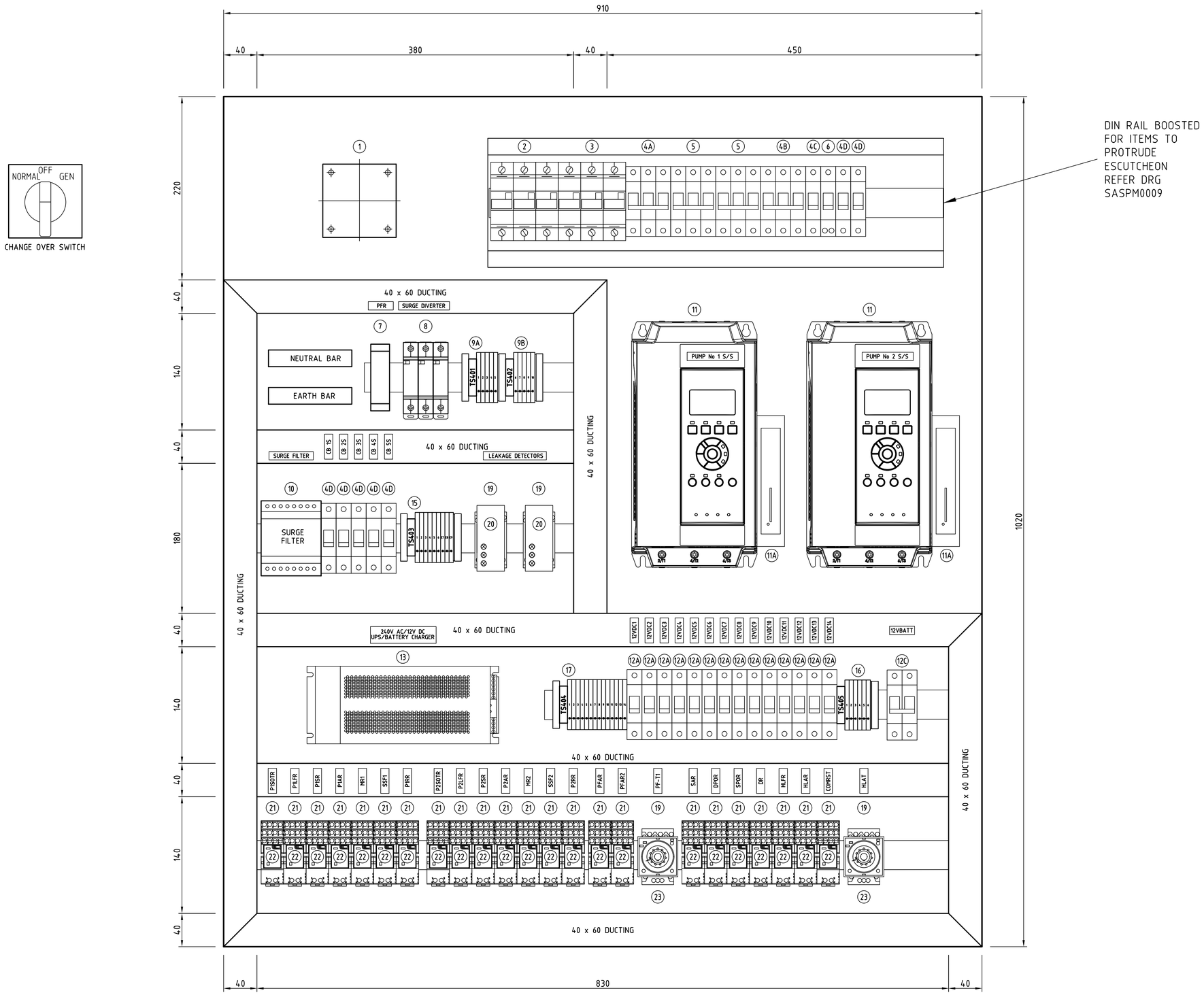

NOT TO SCALE

REV NO	DATE	DESIGN REVIEW	REV'D P.MGR	APP'D P.DIR	AMENDMENT
5	09/03/17	SGW/JF	SGW/GB		ADDED 12VDC CB14 FOR DATA ROUTER.
4	01/03/17	SGW/TB	SGW/GB		ADDED SOFT STARTER MODBUS MODULES RETITLED TOL & 3GRST RELAYS TO SSF & COMRST.
3	16/08/16	SGW/TB	SGW/GB		REMOVED DCFR RELAY REPLACED WITH UPS RELAY OUTPUT.
2	03/08/16	SGW/TB	SGW/GB		ADDED 3G MODEM REMOTE RESET RELAY.
1	18/07/16	SGW/TB	SGW/GB		RELOCATED BATTERY CB & TERMINAL STRIP FROM IT COMPARTMENT TO CONTROL COMPARTMENT.
6	24/04/17	SGW/TB	SGW/GB		INITIAL ISSUE TO SGW.

DESIGN CONSULTANT

CLIENT LOGO

South GippslandWater

PROJECT: STANDARD DRAWINGS

LOCATION: SOUTH GIPPSLAND WATER

DRAWN	DRAFTING CHECK	REVIEWED PROJECT MANAGER	APPROVED PROJECT DIRECTOR
OPT/CT	OPT/RJ		
DESIGNED	DESIGN REVIEW		
SGW/TB	SGW/GB		

TITLE: STANDARD SEWERAGE PUMP STATION
PUMP STATION TO 22kW (SOFT STARTER)
CONTROL & DISTRIBUTION COMPARTMENT (EC004)
GEAR TRAY LAYOUT

SCALE	DRAWING No	REVISION
NTS	SASPM0010	6

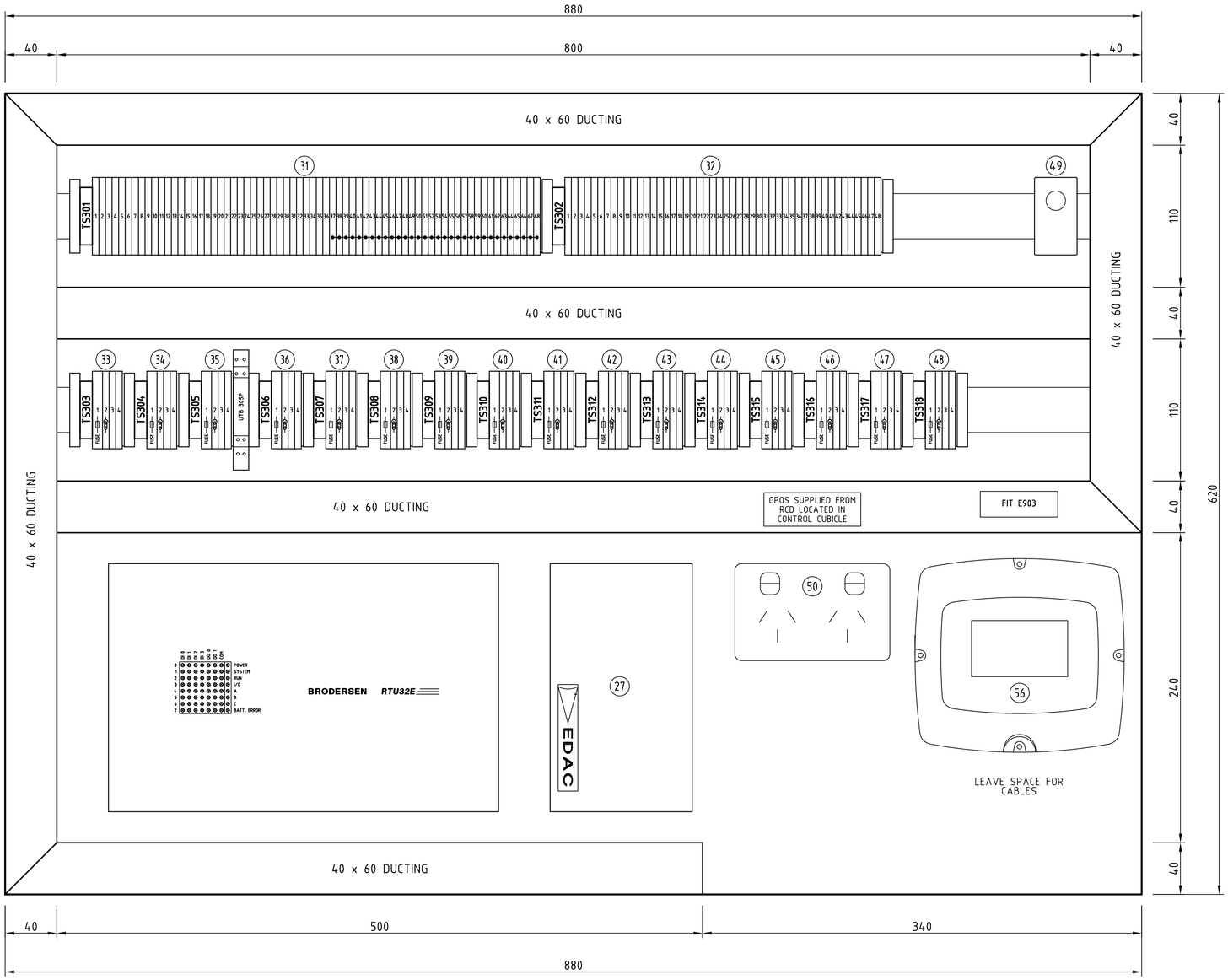

NOTE:
UNLESS OTHERWISE INDICATED
ALL DIN RAIL TO BE STOOD OFF FROM
GEAR TRAY BY A NOMINAL 40mm.

REV NO	DATE	DESIGN REVIEW	REV'D P.MGR	APP'D P.DIR	AMENDMENT
2	24/04/17	SGW/TB	SGW/GB		INITIAL ISSUE TO SGW.
1	01/03/17	SGW/TB	SGW/GB		ITEM 27 RE-ORIENTATED NO LONGER MOUNTED ON SHELF.
0	30/09/15	SGW/TB	SGW/GB		ISSUED FOR REVIEW

DESIGN CONSULTANT

CLIENT LOGO

South GippslandWater

PROJECT STANDARD DRAWINGS

LOCATION SOUTH GIPPSLAND WATER

DRAWN	DRAFTING CHECK	REVIEWED PROJECT MANAGER	APPROVED PROJECT DIRECTOR
OPT/CT	OPT/RJ		
DESIGNED	DESIGN REVIEW		
SGW/TB	SGW/GB		

TITLE
STANDARD SEWERAGE PUMP STATION
PUMP STATION TO 22kW (SOFT STARTER)
TELEMETRY COMPARTMENT (EC003)
GEAR TRAY LAYOUT

SCALE	DRAWING No.	REVISION
NTS	SASPM0011	2

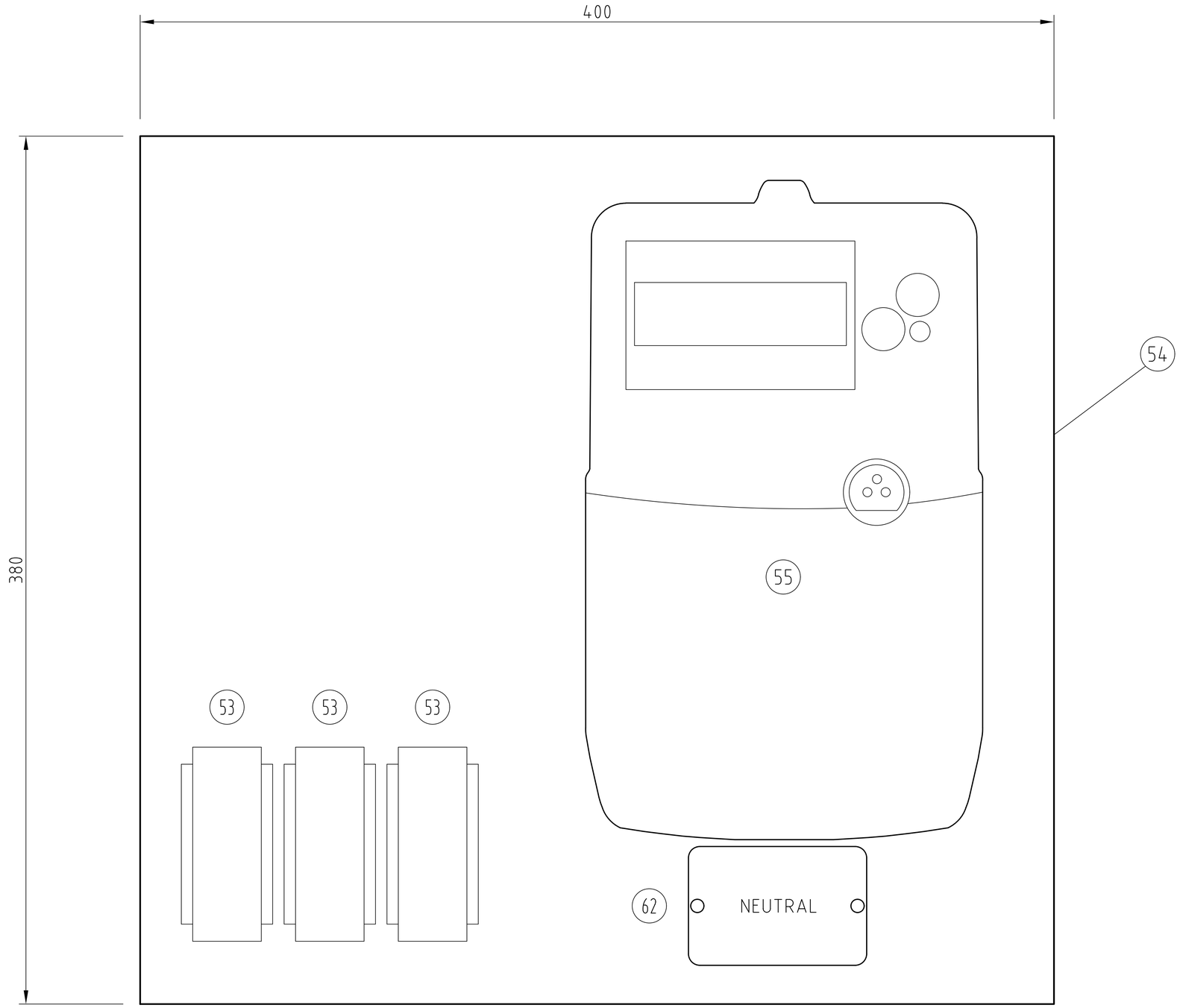

REV NO	DATE	DESIGN REVIEW	REV'D P.MGR	APP'D P.DIR	AMENDMENT
1	24/04/17	SGW/TB	SGW/GB		INITIAL ISSUE TO SGW.
0	30/09/15	SGW/TB	SGW/GB		ISSUED FOR REVIEW

DESIGN CONSULTANT

CLIENT LOGO

South GippslandWater

PROJECT: STANDARD DRAWINGS

LOCATION: SOUTH GIPPSLAND WATER

DRAWN	DRAFTING CHECK	REVIEWED PROJECT MANAGER	APPROVED PROJECT DIRECTOR
OPT/CT	OPT/RJ		
DESIGNED	DESIGN REVIEW		
SGW/TB	SGW/GB		

TITLE

STANDARD SEWERAGE PUMP STATION
PUMP STATION TO 22kW (SOFT STARTER)
METERING COMPARTMENT (EC001)
GEAR TRAY LAYOUT

SCALE	DRAWING No	REVISION
NTS	SASPM0012	1

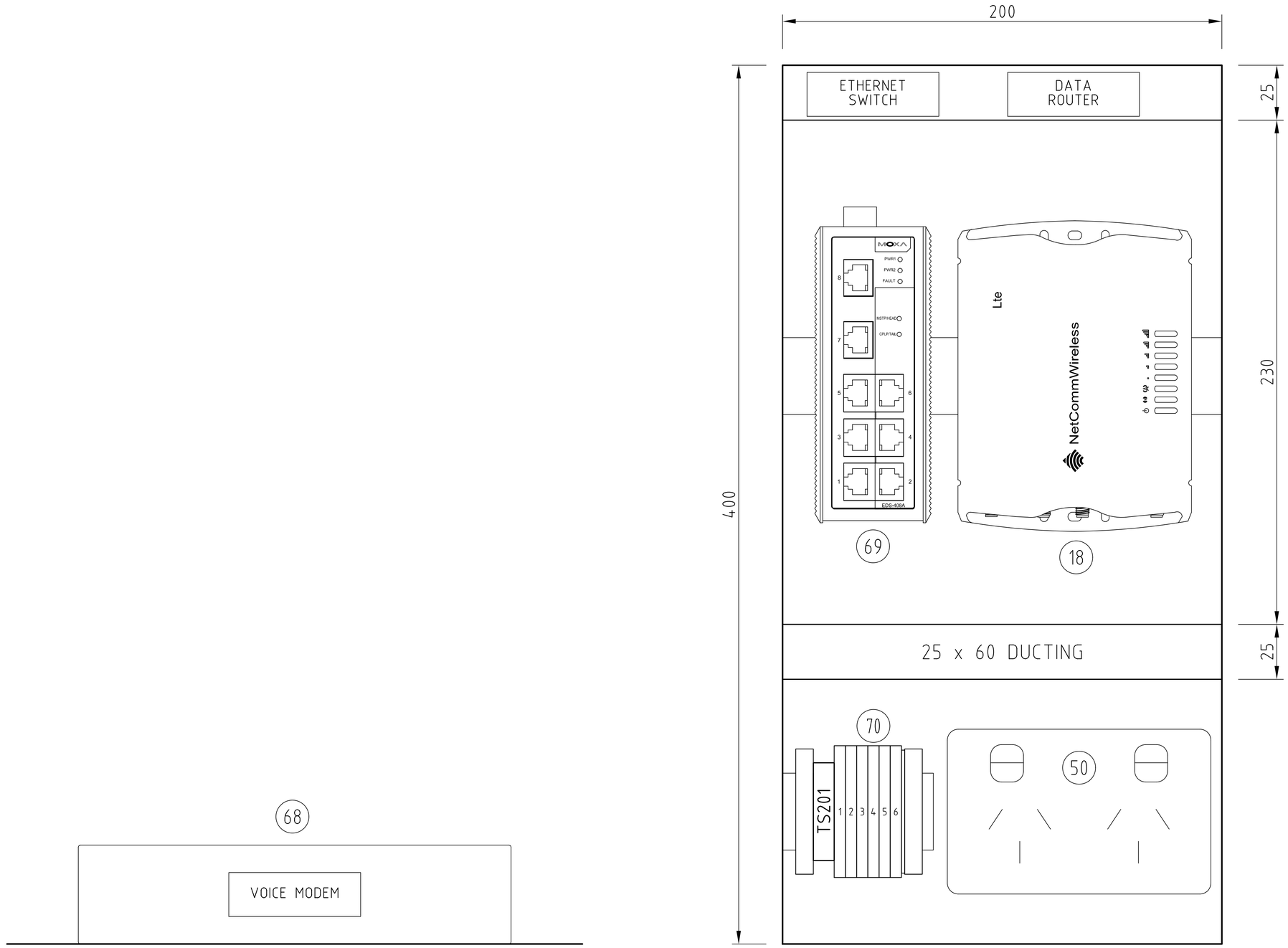

ITEM 68 PLACED ON
FLOOR OF IT COMPARTMENT

REV NO	DATE	DESIGN REVIEW	REV'D P.MGR	APP'D P.DIR	AMENDMENT
3	24/04/17	SGW/TB	SGW/GB		INITIAL ISSUE TO SGW.
2	09/03/17	SGW/JF	SGW/GB		REVISED FOR NEW ETHERNET SWITCH/MODEM DETAILS RESIZED GEAR TRAY.
1	18/07/16	SGW/TB	SGW/GB		RELOCATED BATTERY CB & TERMINAL STRIP TO CONTROL COMPARTMENT RESIZED GEAR TRAY.
0	30/09/15	SGW/TB	SGW/GB		ISSUED FOR REVIEW

DESIGN CONSULTANT

CLIENT LOGO

South GippslandWater

PROJECT STANDARD DRAWINGS

LOCATION SOUTH GIPPSLAND WATER

DRAWN	DRAFTING CHECK	REVIEWED PROJECT MANAGER	APPROVED PROJECT DIRECTOR
OPT/CT	OPT/RJ		
DESIGNED	DESIGN REVIEW		
SGW/TB	SGW/GB		

TITLE

STANDARD SEWERAGE PUMP STATION
PUMP STATION TO 22kW (SOFT STARTER)
IT COMPARTMENT (EC002)
GEAR TRAY LAYOUT

SCALE	DRAWING No	REVISION
NTS	SASPM0013	3

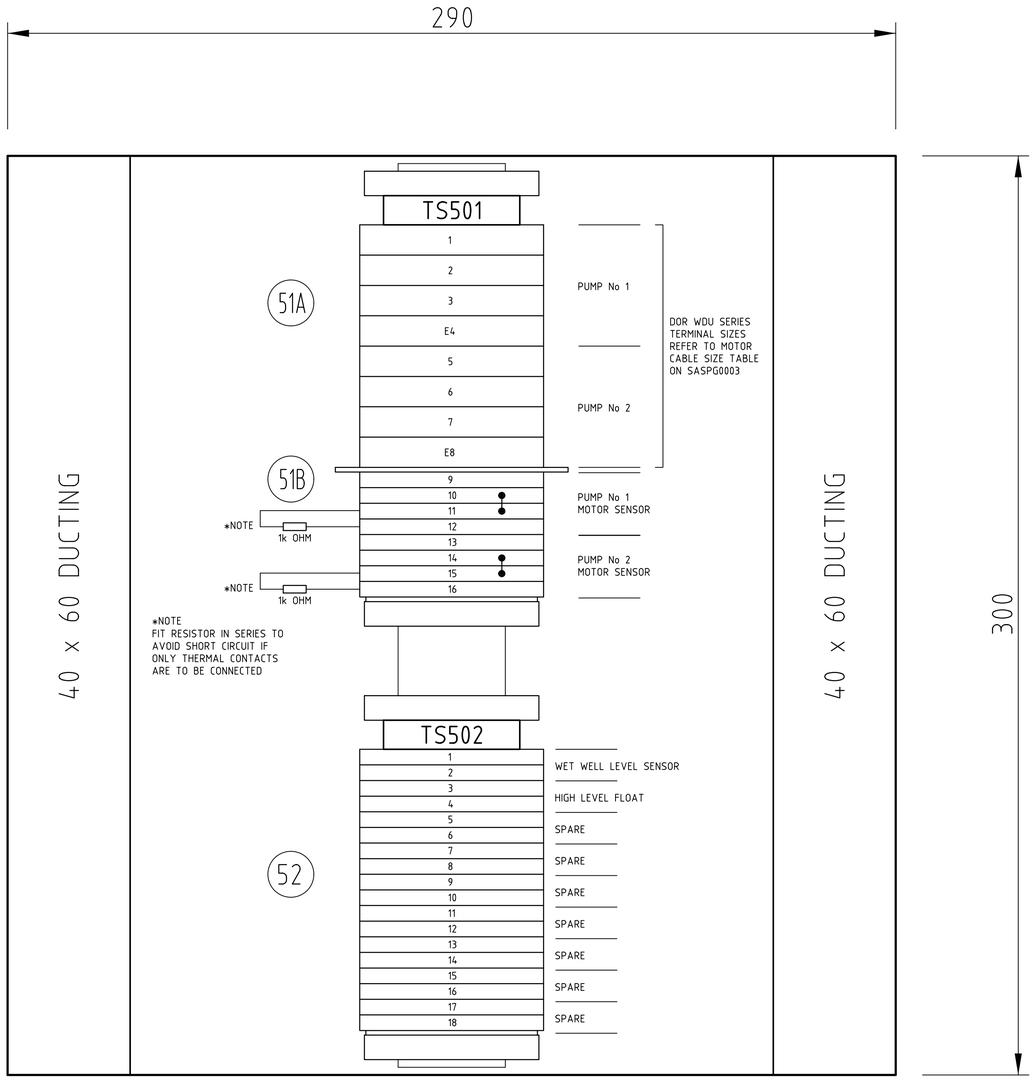

REV NO	DATE	DESIGN REVIEW	REV'D P.MGR	APP'D P.DIR	AMENDMENT
1	24/04/17	SGW/TB	SGW/GB		INITIAL ISSUE TO SGW.
0	30/09/15	SGW/TB	SGW/GB		ISSUED FOR REVIEW

DESIGN CONSULTANT

CLIENT LOGO

South GippslandWater

PROJECT STANDARD DRAWINGS

LOCATION SOUTH GIPPSLAND WATER

DRAWN	DRAFTING CHECK	REVIEWED PROJECT MANAGER	APPROVED PROJECT DIRECTOR
OPT/CT	OPT/RJ		
DESIGNED	DESIGN REVIEW		
SGW/TB	SGW/GB		

TITLE

STANDARD SEWERAGE PUMP STATION
PUMP STATION TO 22kW (SOFT STARTER)
JUNCTION BOX COMPARTMENT (EC005)
GEAR TRAY LAYOUT

SCALE	DRAWING No	REVISION
NTS	SASPM0014	1

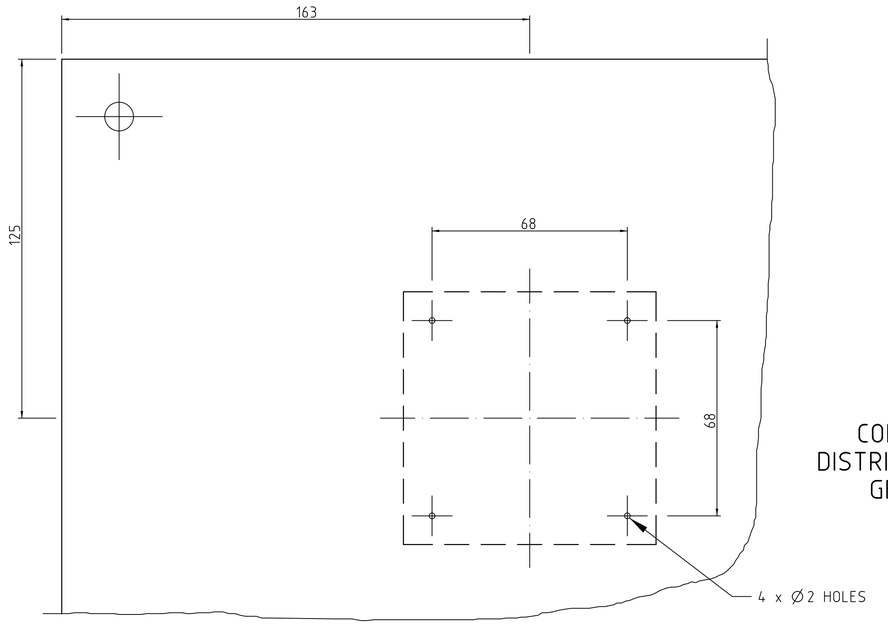

CONTROL AND
DISTRIBUTION COMPT
GEAR TRAY

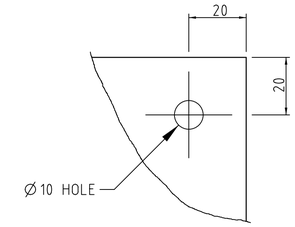

TYPICAL GEAR TRAY
MOUNTING HOLES

GEAR TRAYS TO HAVE A
MOUNTING HOLE IN EACH CORNER

NOTE: ALL GEAR TRAYS AND TOP HAT TO BE POWDER COATED WHITE

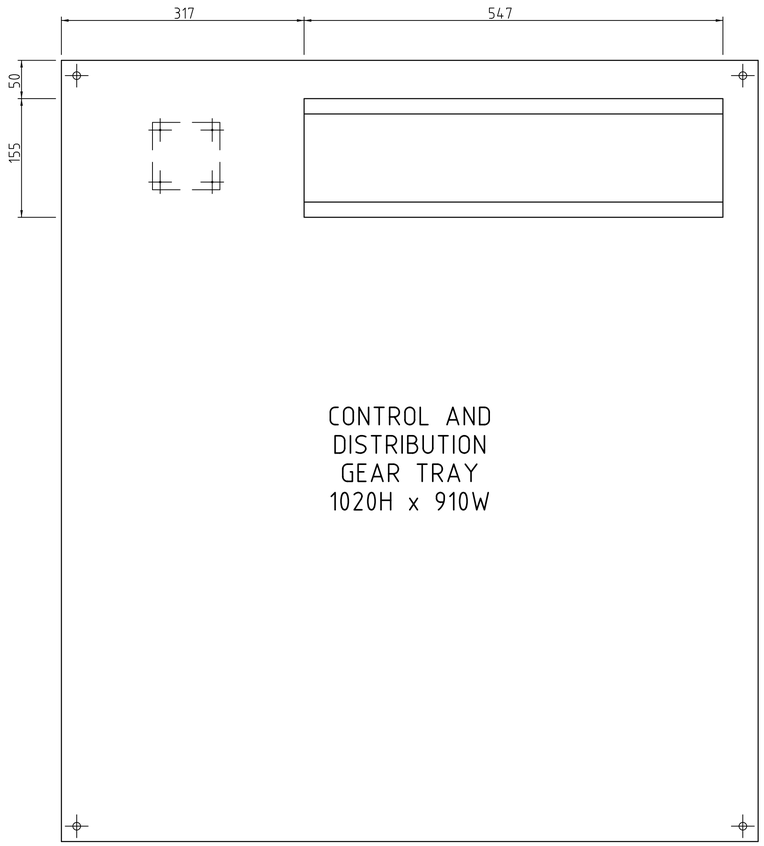

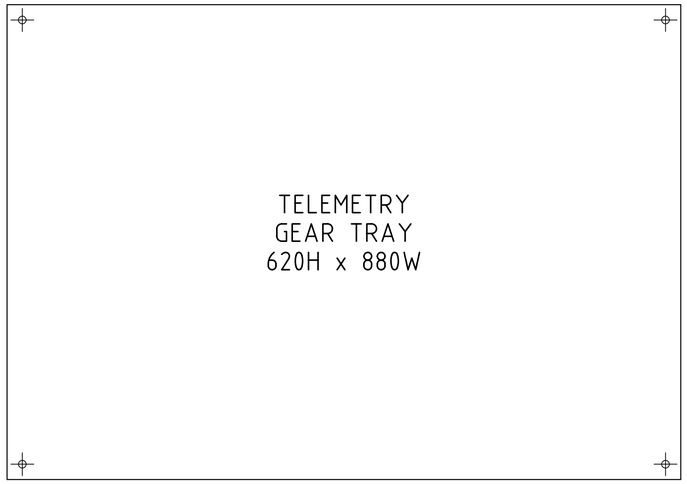

REV NO	DATE	DESIGN REVIEW	REV'D P.MGR	APP'D P.DIR	AMENDMENT
3	24/04/17	SGW/TB	SGW/GB		INITIAL ISSUE TO SGW.
2	09/03/17	SGW/JF	SGW/GB		RESIZED IT GEAR TRAY FOR NEW ETHERNET SWITCH/MODEM DETAILS.
1	16/07/16	SGW/TB	SGW/GB		GENERAL REVISION.
0	30/09/15	SGW/TB	SGW/GB		ISSUED FOR REVIEW

DESIGN CONSULTANT

CLIENT LOGO

South GippslandWater

PROJECT STANDARD DRAWINGS

LOCATION SOUTH GIPPSLAND WATER

DRAWN	DRAFTING CHECK	REVIEWED PROJECT MANAGER	APPROVED PROJECT DIRECTOR
OPT/CT	OPT/RJ		
DESIGNED	DESIGN REVIEW		
SGW/TB	SGW/GB		

TITLE

STANDARD SEWERAGE PUMP STATION
PUMP STATION TO 22kW (SOFT STARTER)
PUMP STATION CUBICLE
GEAR TRAY DRILLING DETAILS

SCALE	DRAWING No.	REVISION
NTS	SASPM0015	3

NOTES
1. BACKGROUND MATERIAL TO BE DETERMINED BY SITE ENGINEER.
2. ALL COLOURS ARE TO MATCH THE PANTONE COLOUR CHART.
3. CORPORATE LOGO AND COLOURS TAKEN FROM GIPPSLAND WATER VISUAL STANDARDS MANUAL COR/07/28223.

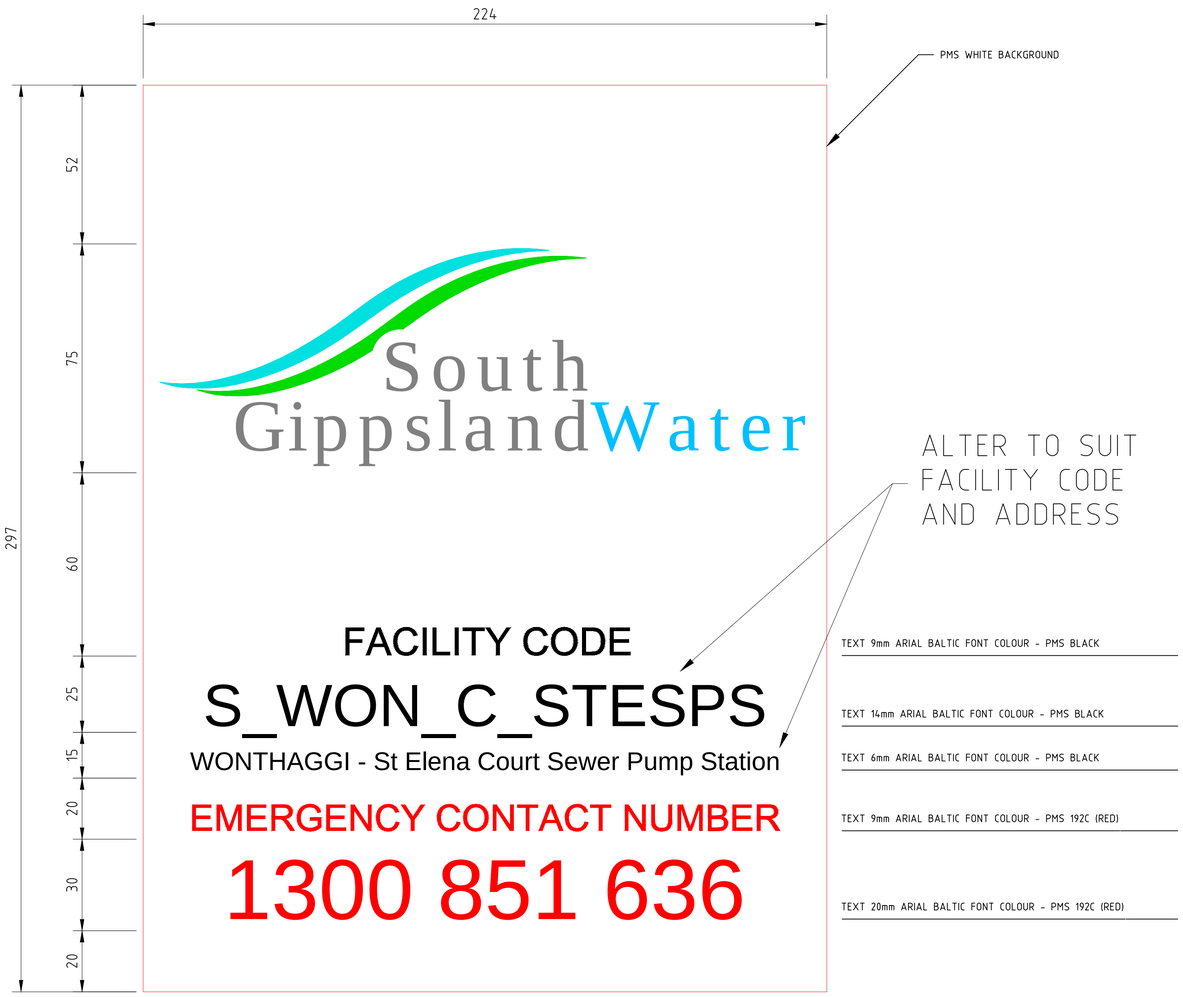

SAMPLE DOOR LABEL

LOCATED ON OUTSIDE OF IT COMPARTMENT DOOR

SAMPLE NAME PLATE LABEL

LOCATED BELOW MAIN SWITCH ON ESCUTCHEON DOOR

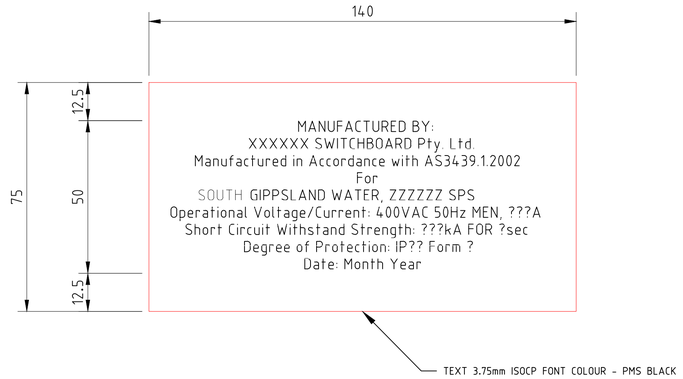

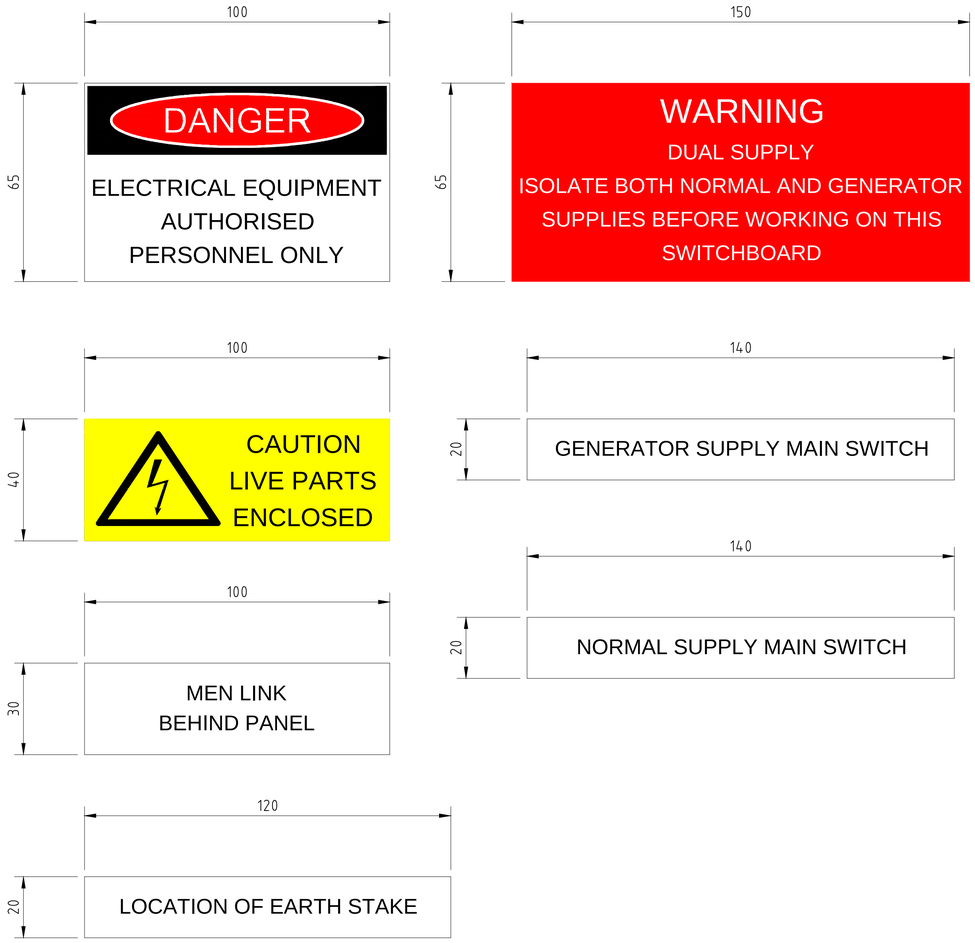

REV NO	DATE	DESIGN REVIEW	REV'D P.MGR	APP'D P.DIR	AMENDMENT
1	24/04/17	SGW/TB	SGW/GB		INITIAL ISSUE TO SGW.
0	30/09/15	SGW/TB	SGW/GB		ISSUED FOR REVIEW

DESIGN CONSULTANT

CLIENT LOGO

South GippslandWater

PROJECT: STANDARD DRAWINGS

LOCATION: SOUTH GIPPSLAND WATER

DRAWN	DRAFTING CHECK	REVIEWED PROJECT MANAGER	APPROVED PROJECT DIRECTOR
OPT/CT	OPT/RJ		
DESIGNED	DESIGN REVIEW		
SGW/TB	SGW/GB		

TITLE: STANDARD SEWERAGE PUMP STATION
PUMP STATION TO 22kW (SOFT STARTER)
PUMP STATION CUBICLE
DOOR LABEL DETAILS

SCALE	DRAWING No	REVISION
NTS	SASPG0005	1